US EPR I&C Design - Overview

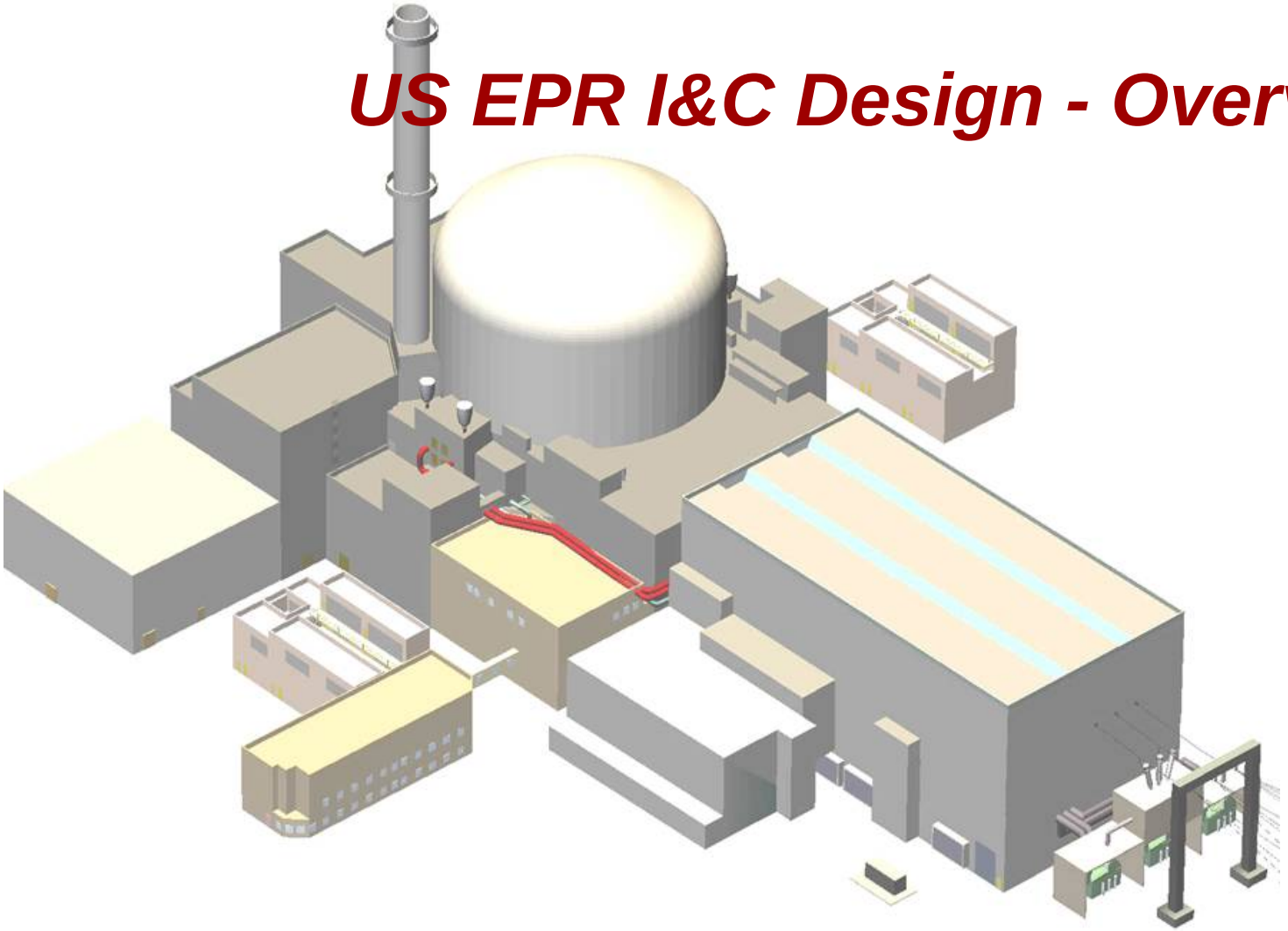

Jeremy Shook
I&C Engineer
New Plants Engineering

Topics

- AREVA World Wide Experience
- Evolution in I&C Design
- EPR I&C Design: Goals and Objectives
- US EPR I&C Architecture and Layout
- US EPR Control Complex Design and Operations
- Summary

AREVA:
Worldwide I&C Experience

AREVA Worldwide Experience

Digital Safety I&C
Worldwide Orders/Installations

- **50 NPP units worldwide**
- **Located in 11 countries**
- **9 different reactor OEMs**
- **More than 8000 years of processor modules operation time**

AREVA Supports the Entire I&C System Design Life Cycle

- Research and Development
- Application Software
- Detailed Design
- Manufacturing
- Factory and Site Acceptance Testing
- Training and Simulator Development
- Implementation
- Configuration Management
- Operational Support

Analog to Digital – Evolution in I&C Design for Nuclear Plants

"Old School" I&C

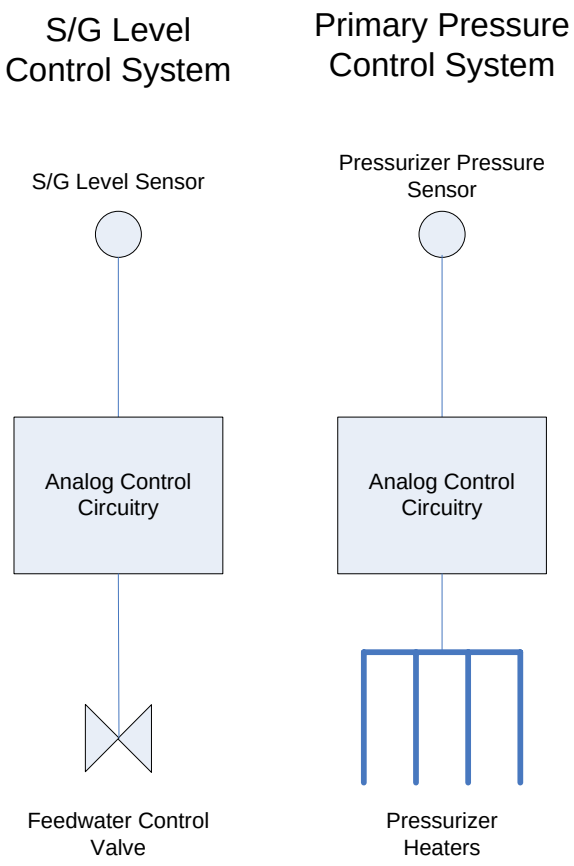

- **Typically a sensor is wired to a set of analog circuitry**
- **Analog circuits have limited functionality – i.e. simple control loops, bistable comparators, etc**
- **Function=system**

Digital I&C

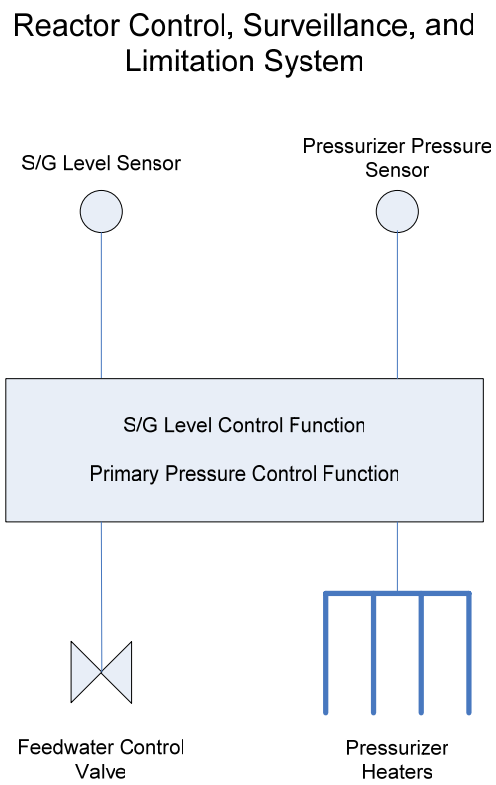

- Digital I&C generally consists of I/O cards, processors, and network communications equipment
- System is not defined by a single function, but generally a group of functions
- Digital I&C offers:
  - Higher level of complexity for functions
  - Large amount of data to be processed, displayed, archived, etc for operators.
  - High degree of reliability and maintainability

EPR I&C Design: Goals and Objectives

Design Goals to Support Improved I&C Safety, Performance and Reliability

- Improved safety/reliability
  - Actuate trips when needed
  - Avoid spurious actuation
- Improved maintainability
  - On-line testing and diagnostics
  - On-line maintenance without impact to plant operation or system operability
- Improved automation
  - Automatic limitation functions to avoid protection system actuation
- Improved information management for operators
- Support advanced plant PRA goals
- Support advanced plant staffing goals
- World-wide standardization to maximum extent possible
- Acceptance by international regulatory authorities

US EPR I&C Systems Design

Acronyms

- **AMS:** Aeroball Monitoring System
- **ALU:** Actuation Logic Unit
- **APU:** Acquisition & Processing Unit
- **CRC:** Cyclic Redundancy Check
- **CRDM:** Control Rod Drive Mechanism
- **GW:** Gateway
- **HBS:** Hardwired Backup System
- **HMI:** Human Machine Interface
- **ISC:** I&C Service Center
- **MCR:** Main Control Room
- **MSI:** Monitoring & Service Interface
- **OLM:** Optical Link Module
- **PACS:** Priority Actuation & Control System
- **PAS:** Process Automation System
- **PI:** Panel Interface
- **PICS:** Process Information & Control System
- **PLD:** Programmable Logic Device
- **PS:** Protection System
- **PZR:** Pressurizer
- **QDS:** Qualified Display System
- **RAM:** Random Access Memory
- **RAU:** Remote Acquisition Unit
- **RCCA:** Rod Control Cluster Assembly
- **RCSL:** Reactor Control, Surveillance, & Limitation System
- **RSS:** Remote Shutdown Station
- **RTE:** Runtime Environment
- **SAR:** Safety Analysis Report
- **SAS:** Safety Automation System
- **SER:** Safety Evaluation Report
- **SICS:** Safety Information & Control System
- **SPND:** Self Powered Neutron Detectors
- **TSC:** Technical Support Center
- **TXP:** Teleperm XP
- **TXS:** Teleperm XS

Key US EPR I&C Design Features

- Robust Safety System Design
  - 4 Divisions of Protection System
    - Redundant voting allows channel out of service for full cycle of operation. Auto logic re-configure from 2/4 to 2/3
  - Functional Diversity
  - On-Line DNBR and Linear Power Density
    - Partial "trips" and auto load rejection to prevent reactor trips
- High Level of Automation
  - Non-Power Operations
    - RCS inventory management during shutdown cooling and transition modes
  - Automatic emergency feedwater actuation block during shutdown
- Availability Measures
  - 3-Loop Operation
    - Partial "trip" with runback to prevent reactor trip
  - Feed flow-Rx Power Imbalance
    - Prevents low S/G water level reactor trips during start up
  - Limitation Functions
- Operational Enhancements
  - No operator action required for 30 min following an accident/anticipated transient
  - On-line procedures at operator work station
  - Integrated Data Management
    - EOF and TSC have same overview displays as control room
  - On-line equipment OOS displays
  - Automated tagging displays
  - Direct support of on-line and outage risk assessment
  - Advanced Alarm Management
    - Part of display hierarchy
    - Integrated with operating procedures
- Reduction of Maintenance Burden
  - System self testing and diagnostics
    - Elimination of channel checks
    - Elimination of manual logs

US EPR I&C Conceptual Architecture

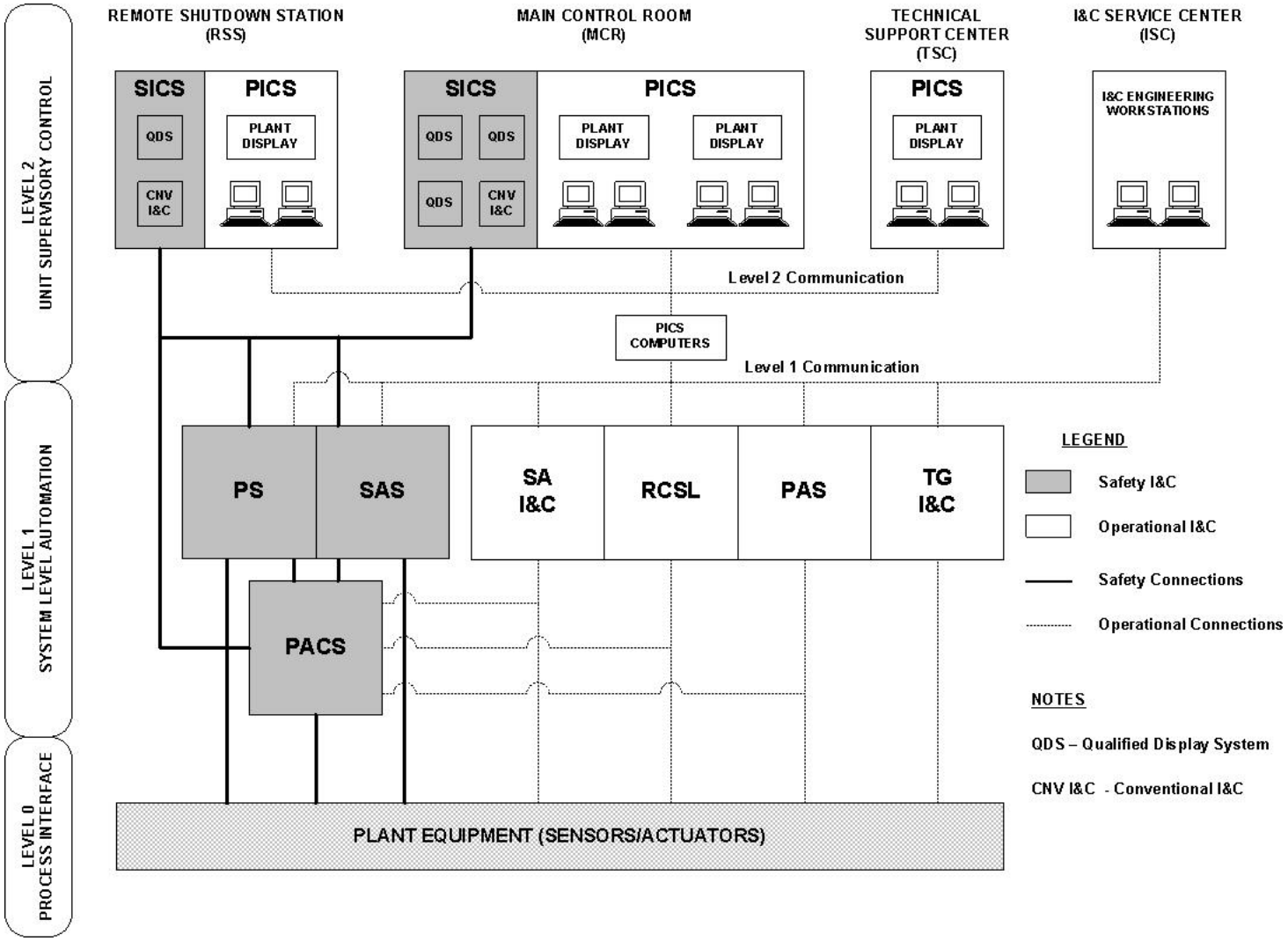

I&C Equipment Layout

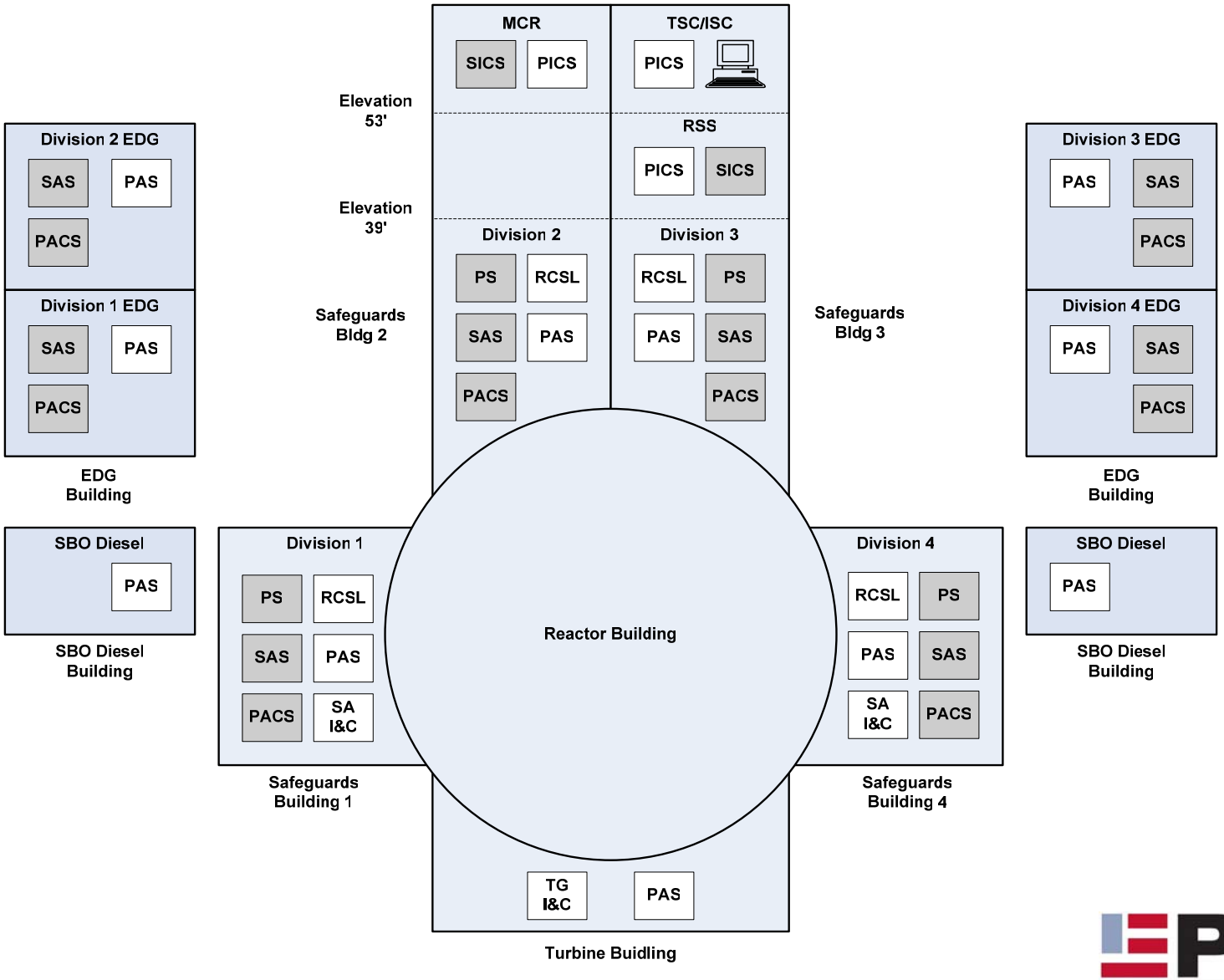

Robust PS Design Employs Functional Diversity

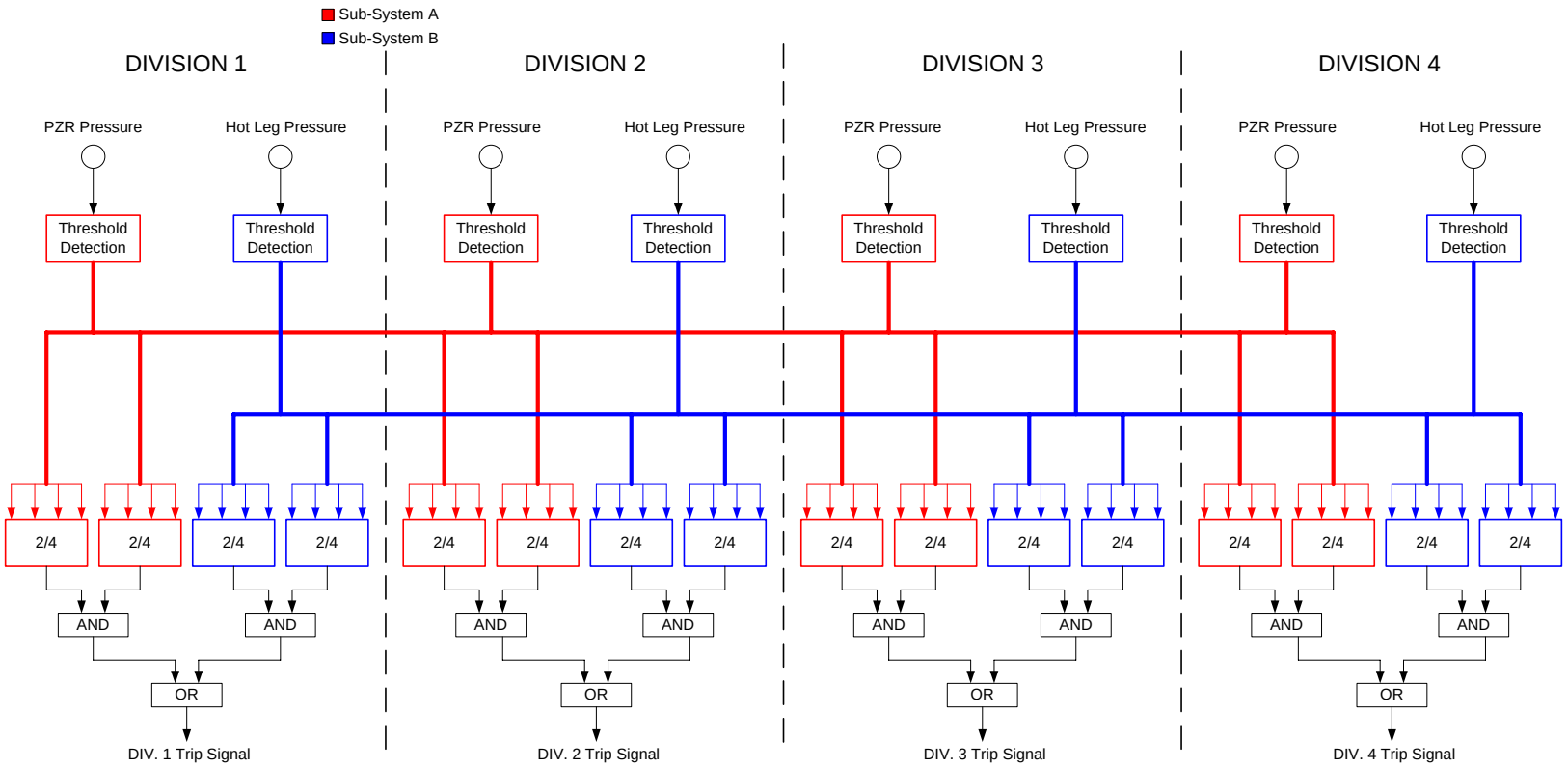

Limitation Functions Improve Availability By Reducing Challenges to PS

Protection – Threshold for RT and ESF

Limitation – Threshold for actions required to avoid protection system actuation

Level 2 – Threshold for slow transients outside normal control boundary

Level 1 – Safety Analysis Initial Condition

EPR Has High Level of Automation

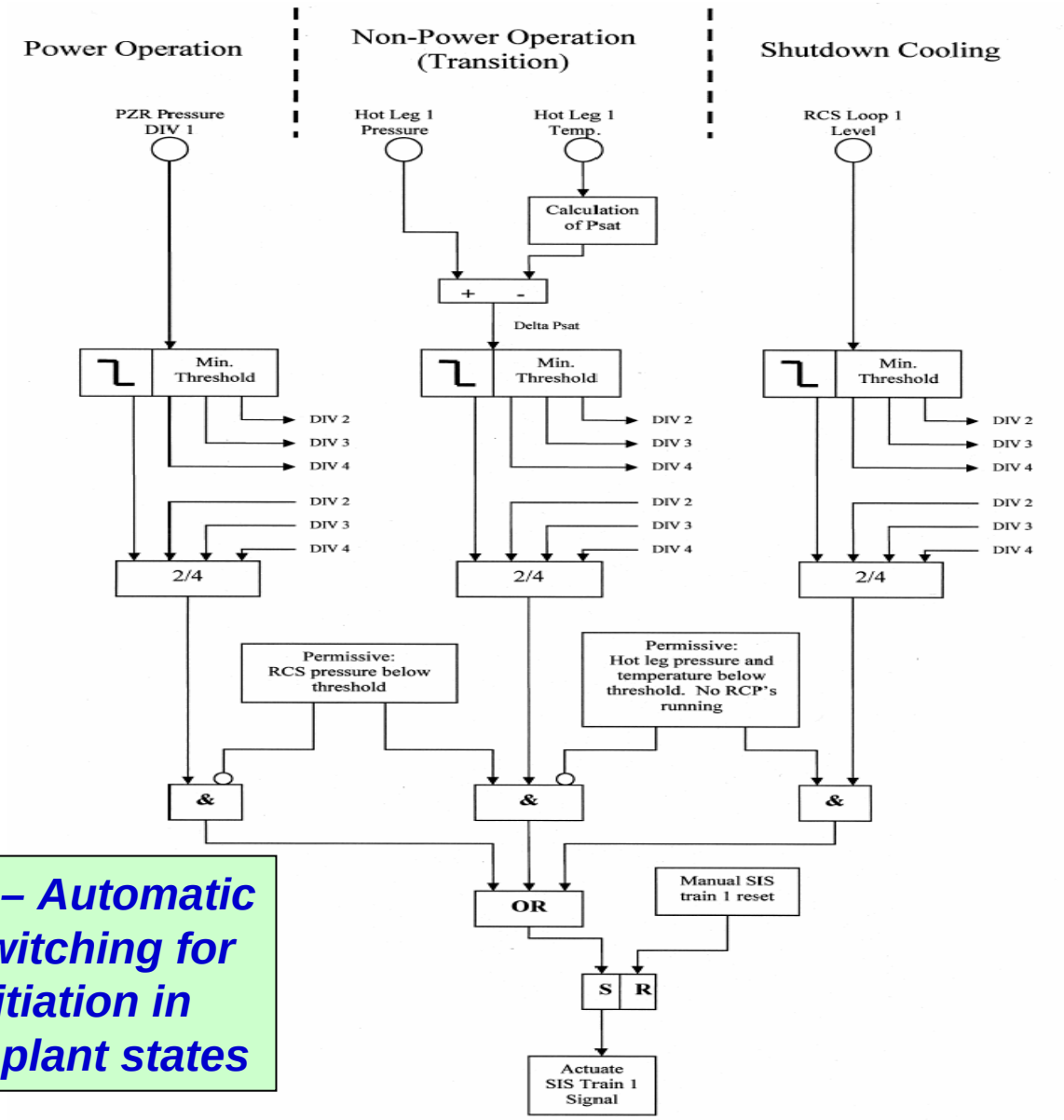

Example – Automatic mode switching for SIS initiation in different plant states

US EPR Control Complex Design and Operations

OL3 EPR Control Room

US EPR Control Complex Overview

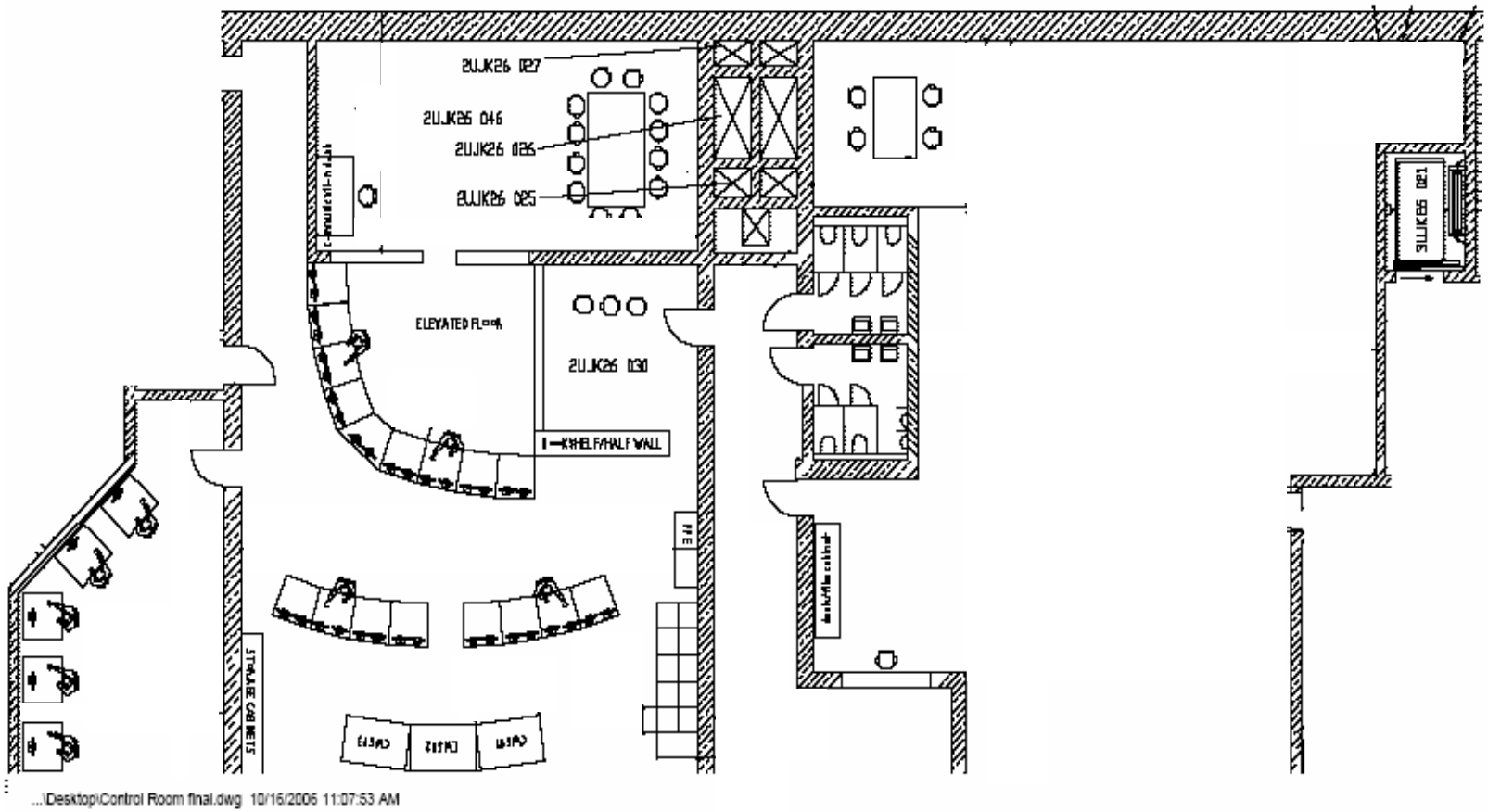

Staffing and Division of Responsibilities

- 1 Supervisor
  - Senior Reactor Operator License
- 2 RO licensees
  - Reactor Operator -- RO
  - Turbine Operator -- TO
- Auxiliary Operator
  - not normally manned,
    - Planned evolutions only (startup, shutdown)
    - E-Plan or Emergency Ops Support

Concept of Operations

- Essentially all operations are performed using PICS, including emergency operations, as long as PICS is available
- SICS is intended for use in the unlikely event of total unavailability of PICS
- Administrative controls drive the recovery of PICS or require shutdown via SICS

Workstation - Typical Assignment of Screens

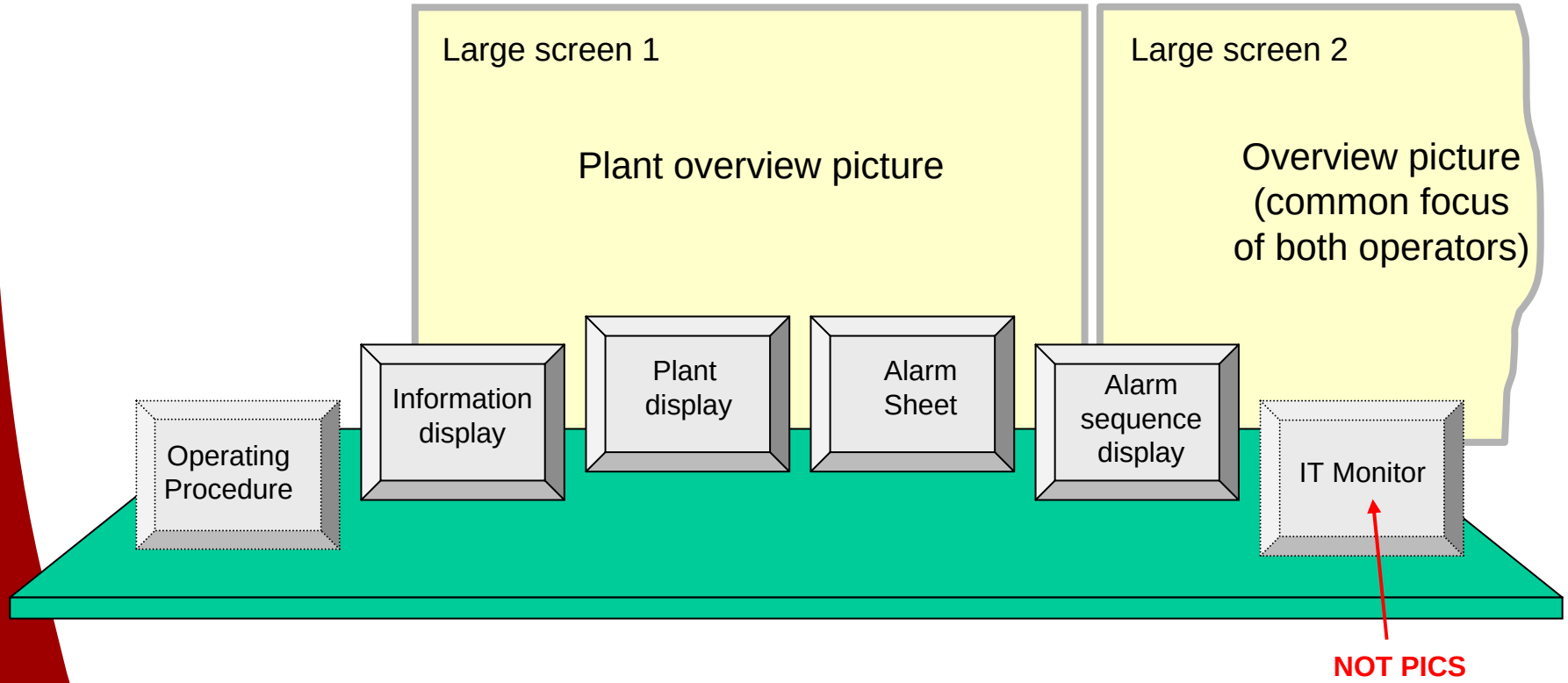

PICS Screen Navigation

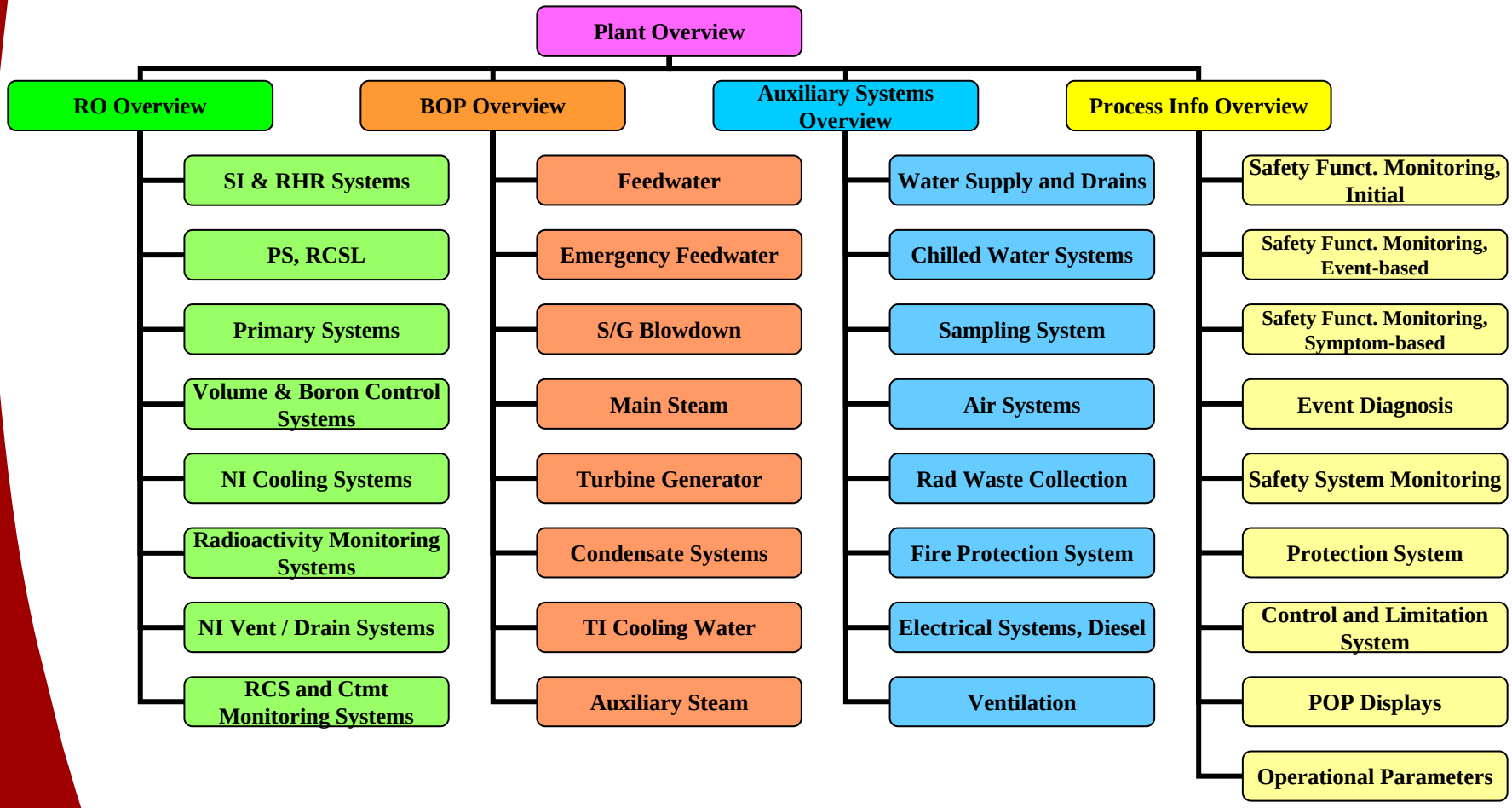

PICS Screen Example

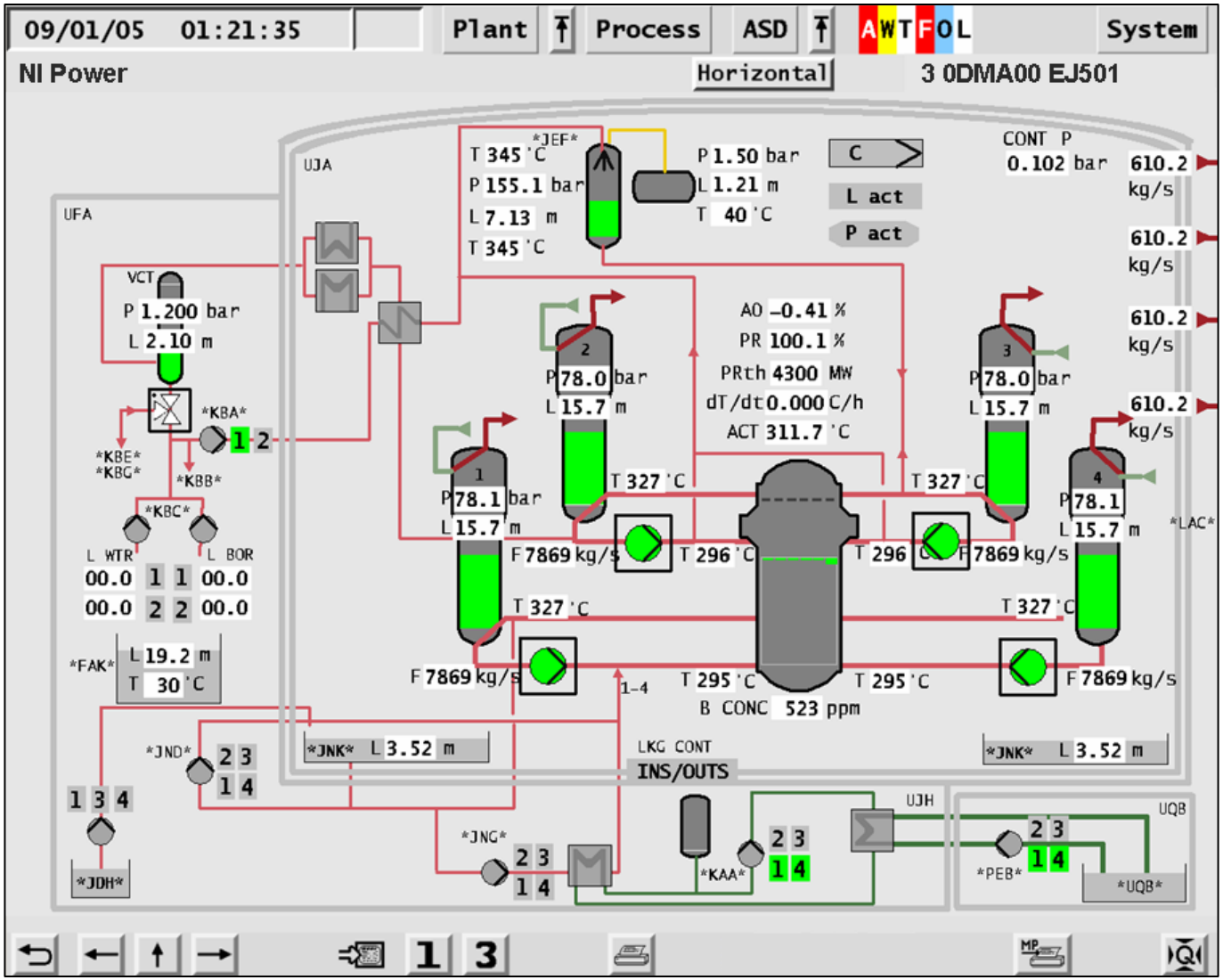

SICS/QDS Screens

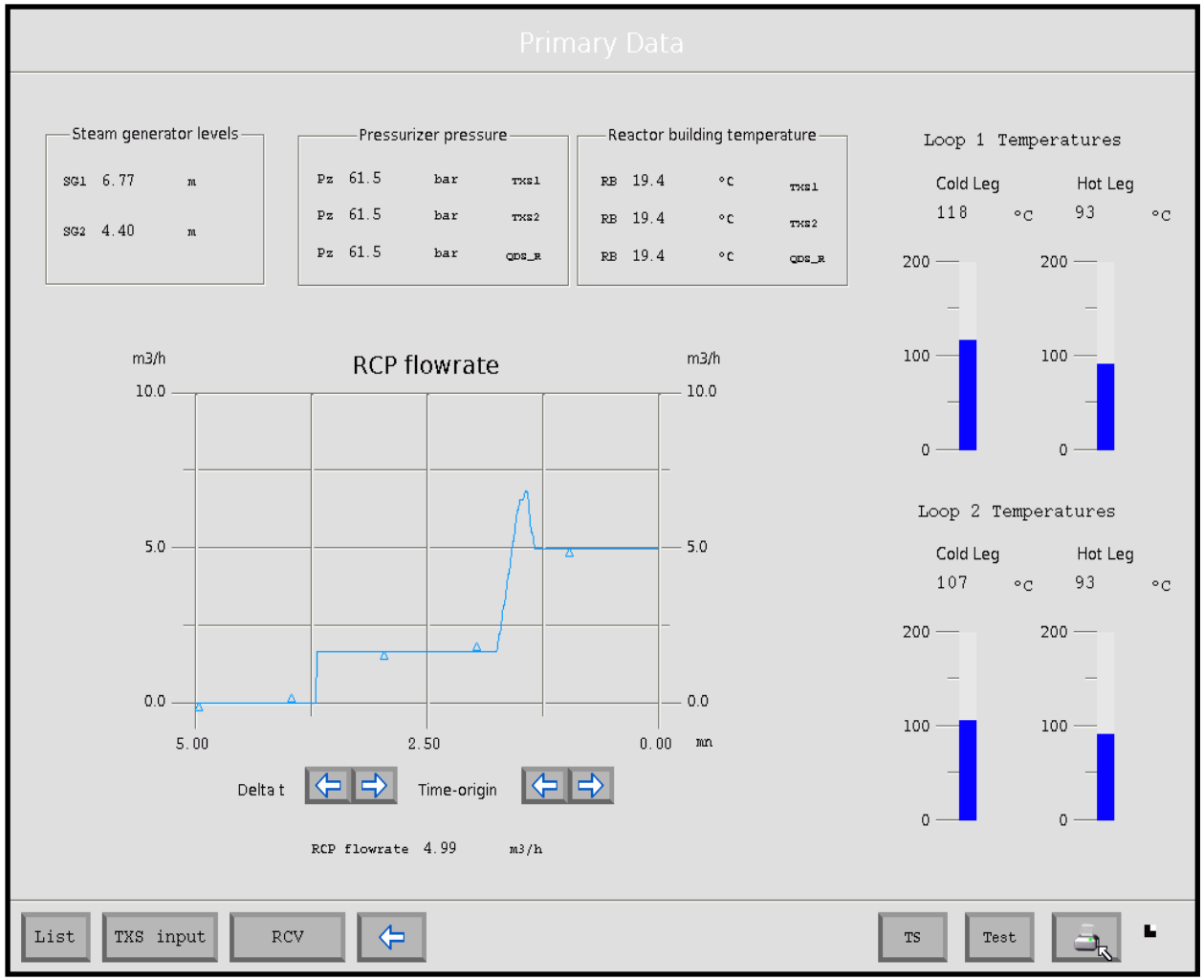

Summary

The U.S. EPR I&C Design Offers Improved Safety, Performance, and Reliability

- AREVA supports the entire system design life cycle
- U.S. EPR I&C systems meet design and regulatory requirements
  - Design and control room/HFE design will leverage insights gained from the design of OL3
  - U.S. EPR I&C systems design will address applicable NRC standards and requirements and will incorporate insights gained from operating experience
  - Key design features improve overall safety, operations, maintenance.