ABWR Seminar – Reactor, Core & Neutronics

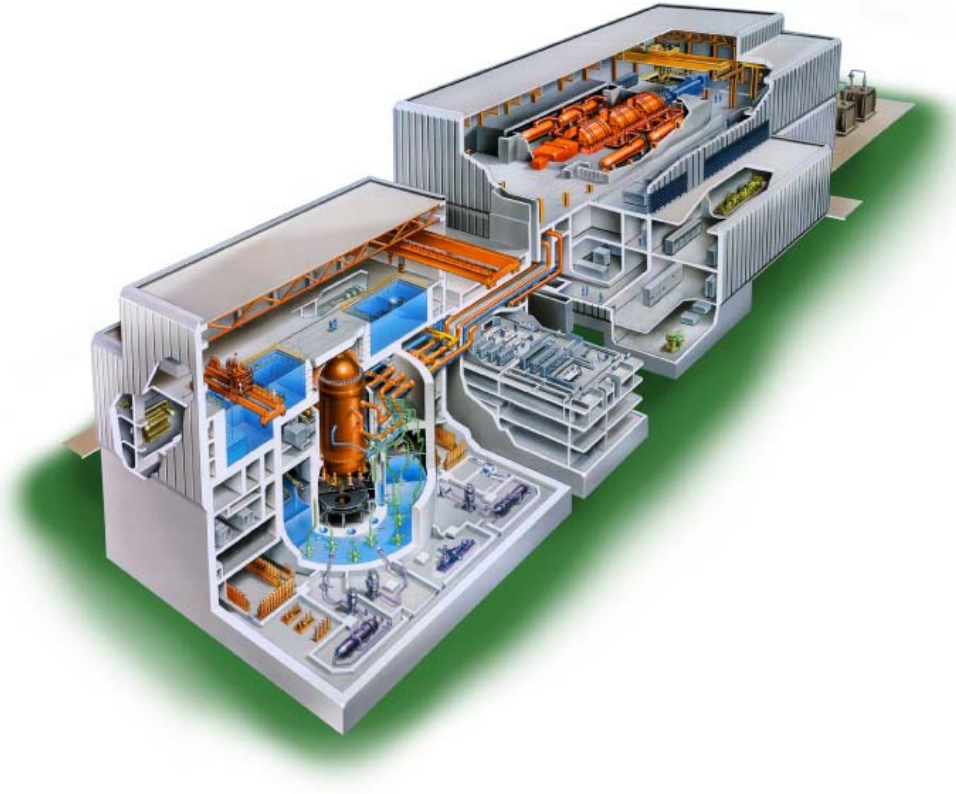

LE Fennern

April 13, 2007

imagination at work

Copyright © 2007 by GE Energy / Nuclear

Contents

- Reactor Specification
- Reactor Pressure Vessel
- Reactor Assembly
- Core & Fuel Design

Copyright © 2007 by GE Energy / Nuclear

ABWR Reactor Specification

- 3926 Rated MWth
- 872 Fuel Bundles
  - N- Lattice (symmetric water gap)
  - Active Fuel Length (3.66 m; 12 ft)
  - Moderate Power Density (51 kw/liter)
- 205 Control Blades
  - Fine Motion Control Rod Drives (FMCRDs)
    - » Fast Hydraulic Scram
    - » Motor-driven Withdrawal/Insertion
- RPV diameter increased from previous BWRs (7.1 m; 280 in), but ~0.7 m (~2.3 ft) shorter due to changes in configuration

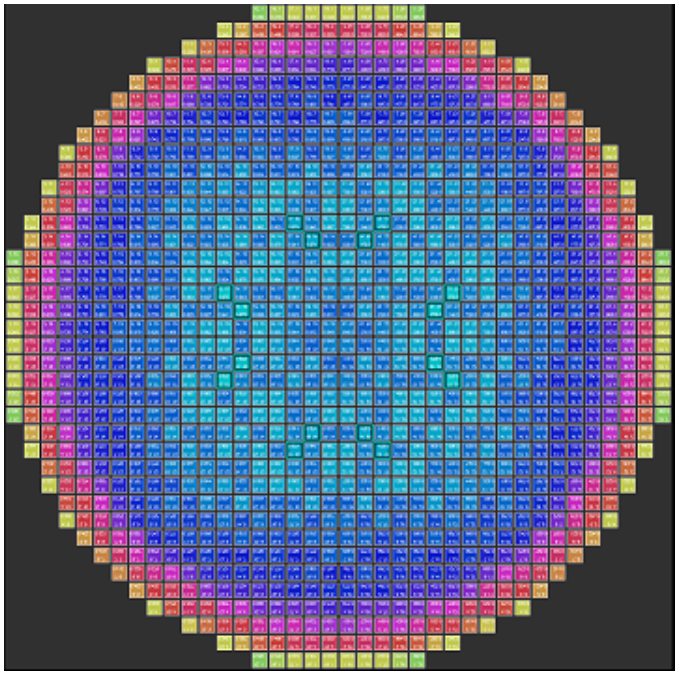

Copyright © 2007 by GE Energy / Nuclear

ABWR Parameter Comparison

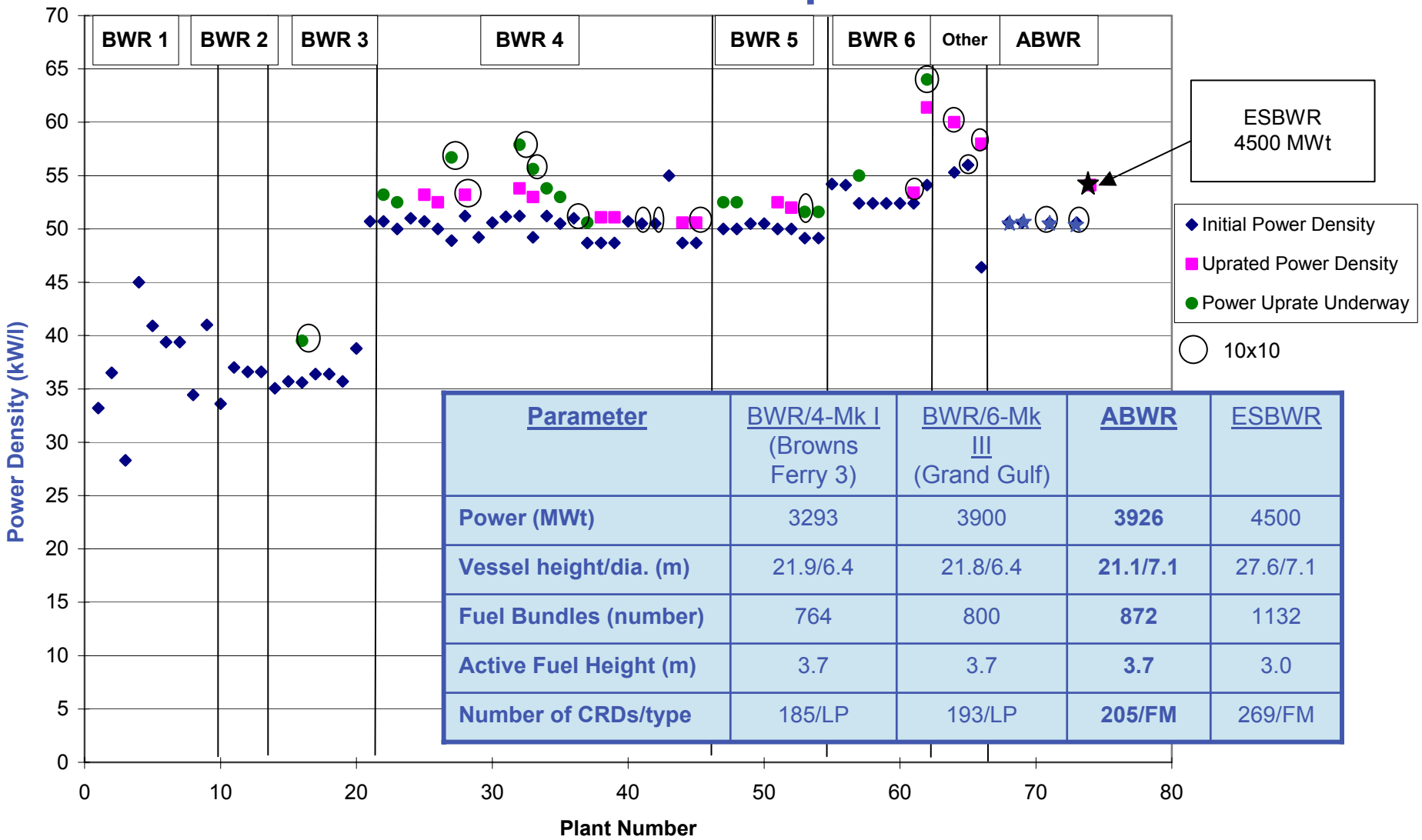

Parameter	BWR/4-Mk I (Browns Ferry 3)	BWR/6-Mk III (Grand Gulf)	**ABWR**	ESBWR
Power (MWt)	3293	3900	**3926**	4500
Vessel height/dia. (m)	21.9/6.4	21.8/6.4	**21.1/7.1**	27.6/7.1
Fuel Bundles (number)	764	800	**872**	1132
Active Fuel Height (m)	3.7	3.7	**3.7**	3.0
Number of CRDs/type	185/LP	193/LP	**205/FM**	269/FM

Copyright © 2007 by GE Energy / Nuclear

ABWR Reactor Pressure Vessel (RPV)

The RPV:

- Houses reactor core (fuel)
- Serves as fission product barrier (to protect public)
- Provides floodable volume of water to keep reactor core cooled

Kashiwazaki-Kariwa 7

RPV Installation

Copyright © 2007 by GE Energy / Nuclear

ABWR RPV Forged Ring

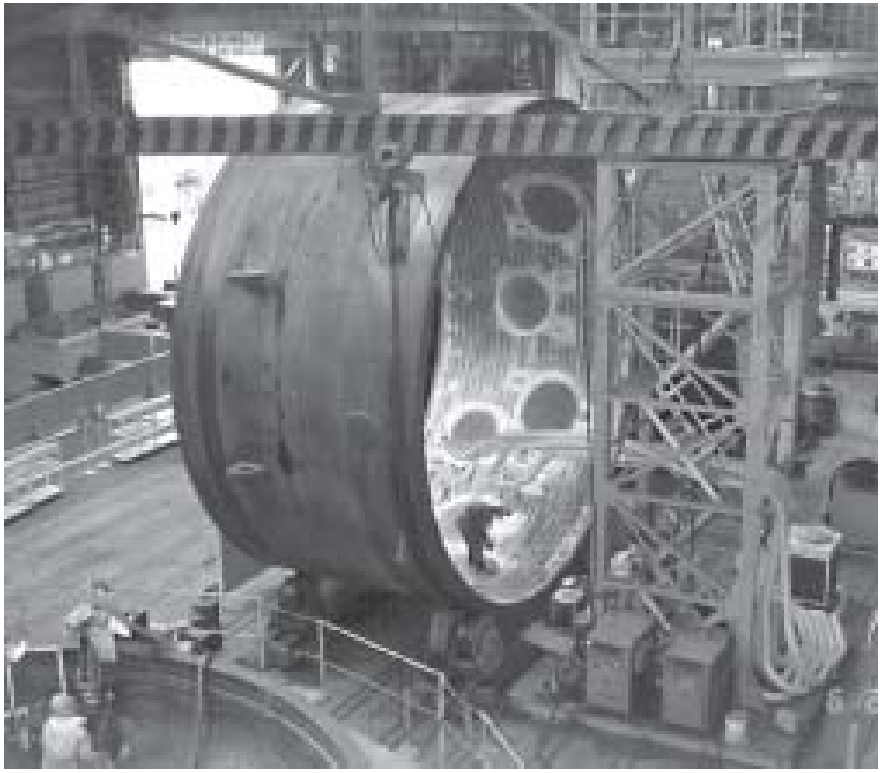

Copyright © 2007 by GE Energy / Nuclear

Fit up of Shell and Bottom Head

ABWR Reactor Assembly

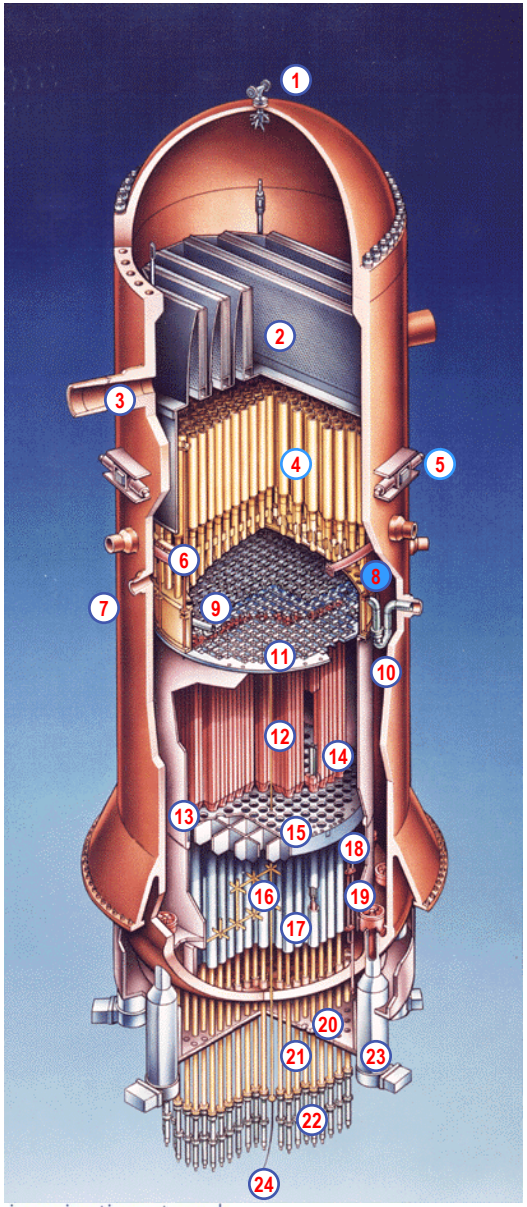

1 Vent and Head Spray
2 Steam Dryer
3 Steam Outlet Flow Restrictor
4 Steam Separators
5 RPV Stabilizer
6 Feedwater Sparger
7 Shutdown Cooling Outlet
8 Low Pressure Flooder (LPFL)/Shutdown Cooling
9 High Pressure Core Flooder (HPCF) Sparger
10 HPCF Coupling
11 Top Guide
12 Fuel Assemblies
13 Core Shroud
14 Control Rod
15 Core Plate
16 In-Core Instrument Guide
17 Control Rod Guide Tubes
18 Core Differential Pressure Line
19 Reactor Internal Pumps (RIP)
20 Thermal Insulation
21 Control Rod Drive Housings
22 Fine Motion Control Rod Drives
23 RIP Motor Casing
24 Local Power Range Monitor

Copyright © 2007 by GE Energy / Nuclear

Improved Reactor Vessel and Internals

- Inside type vessel flange
- Shorter standpipes for the steam separator
- Steam nozzle with integral flow restrictor
- Welded double thermal sleeve feedwater nozzle
- Elimination of core spray
- Conical vessel support skirt
- Elimination of large pipe connection below core
- Forged shell rings adjacent to and below the core belt line region

Copyright © 2007 by GE Energy / Nuclear

Steam Separators

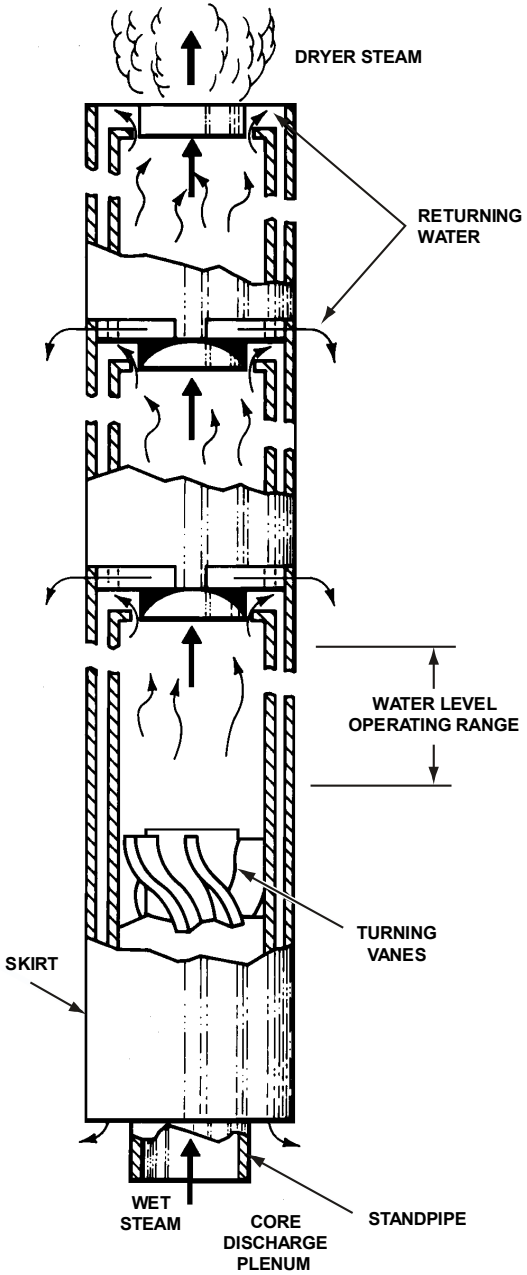

Copyright © 2007 by GE Energy / Nuclear

BWR Steam Dryer Panels

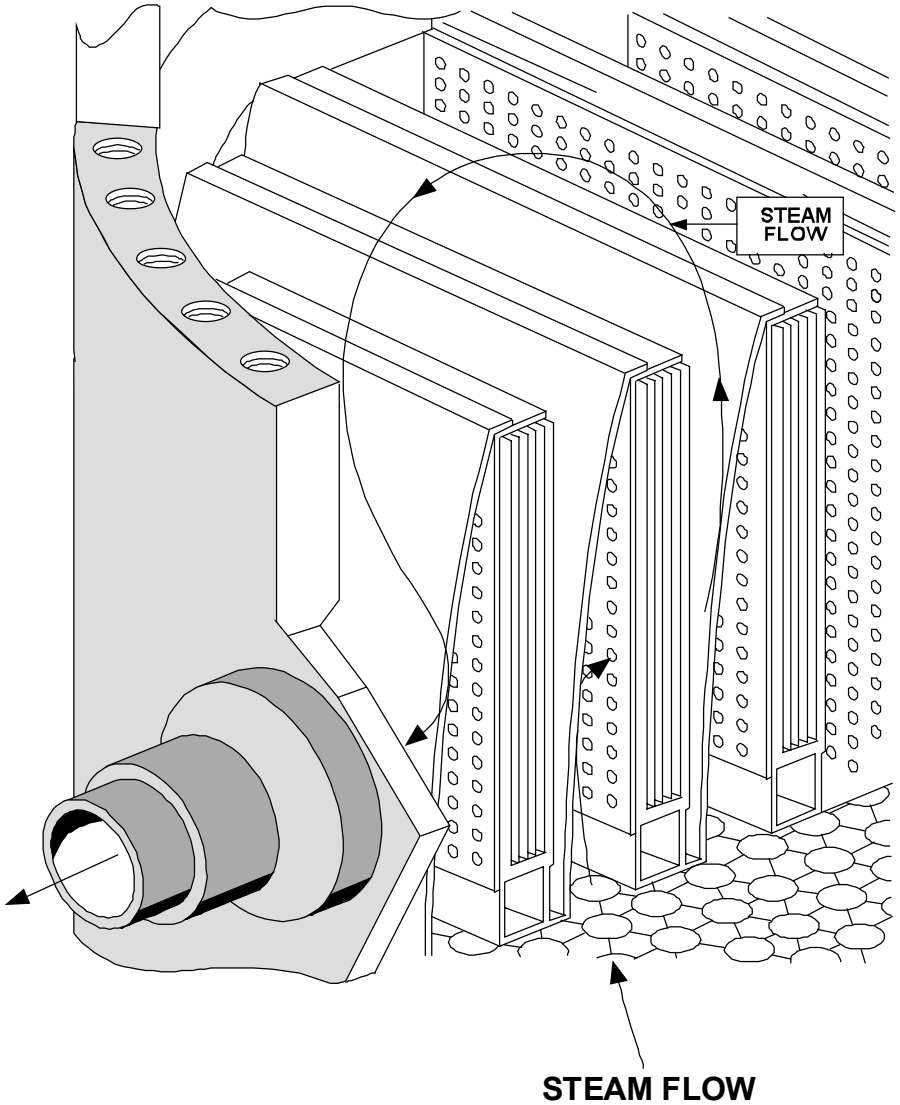

Copyright © 2007 by GE Energy / Nuclear

Feedwater Sparger & Thermal Sleeves

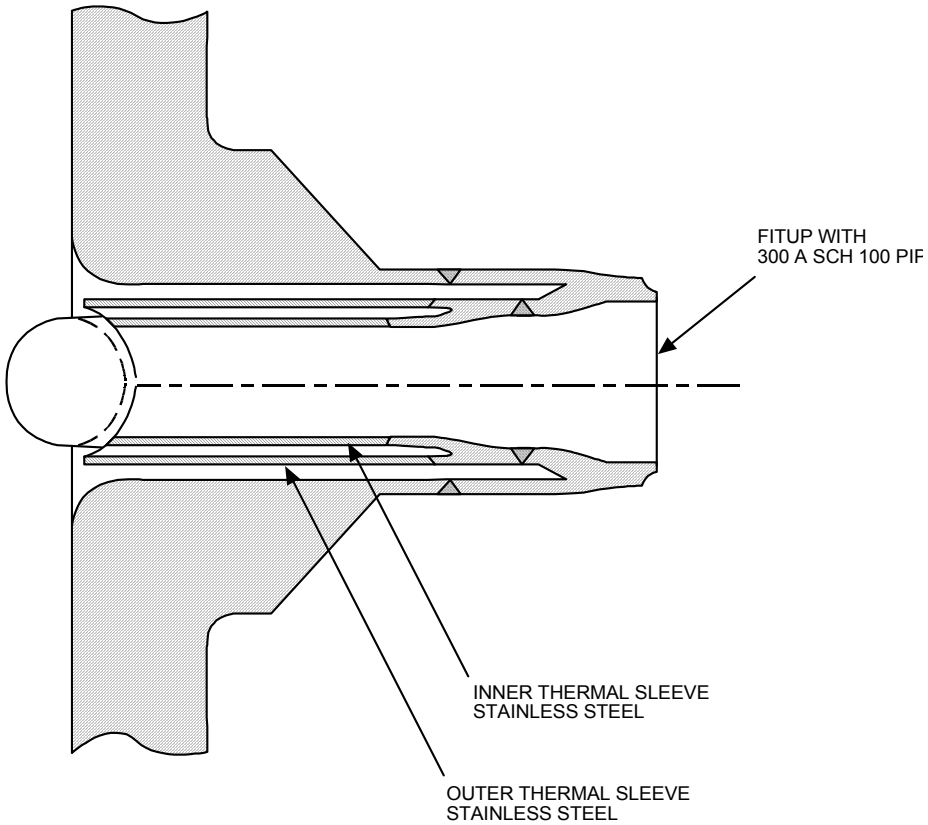

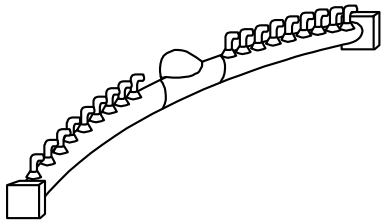

Copyright © 2007 by GE Energy / Nuclear

Recirc Flow & Steam Quality

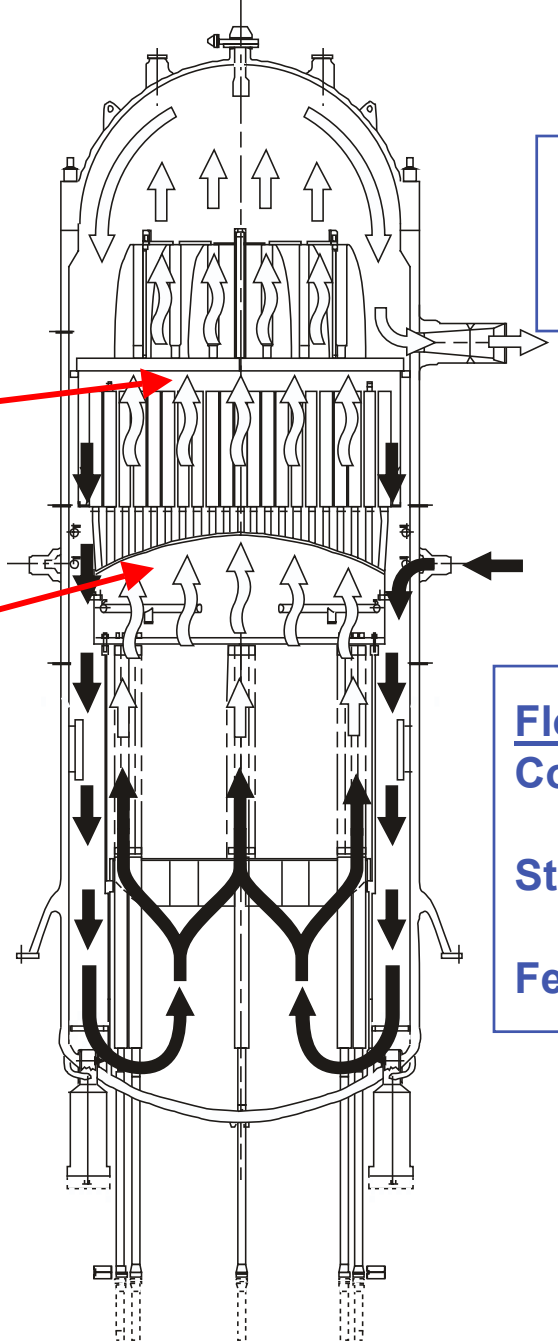

Steam Dryer Exit: >99.9%

Steam Separator Exit: ~85-90%

Core Exit: ~14.5%

Flowrates:

Core	=	52.2 Mkg/hr
Steam	=	7.64 Mkg/hr
FeedWater	=	7.64 Mkg/hr

Copyright © 2007 by GE Energy / Nuclear

Reactor Internal Pump (RIP)

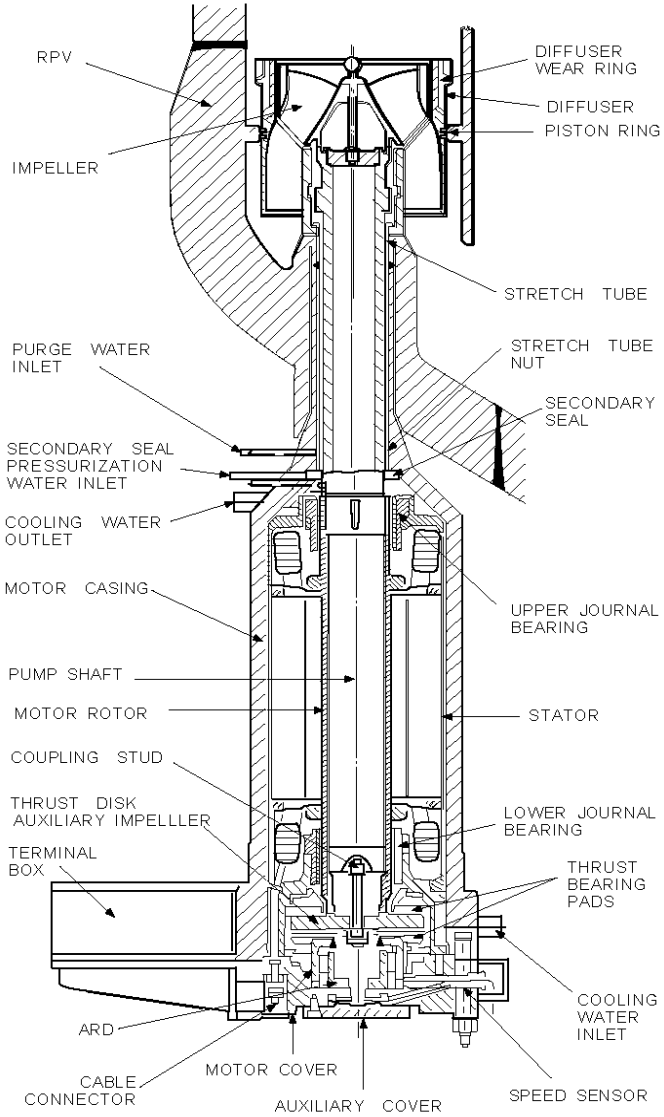

Key design features:

- Ten pumps can provide up to 110% flow
  - Full flow with one pump out of service
- Wet induction motor, seal-less design
- Continuous purge with clean water
- Impellers & motors removable without reactor draining
- Back seating shaft & blowout restraint hangers provide redundant LOCA prevention
- Solid-state, adjustable frequency speed control
- Multiple power supplies reduces probability of significant flow loss

Key benefits:

- Eliminates external recirculation loops
  - Compact containment design
  - No large nozzles below core
    - » Safer / ECCS optimized
  - Reduced In-service inspections
    - » less occupational exposure
- Less pumping power required
- Flexible operation

Copyright © 2007 by GE Energy / Nuclear

Reactor Recirculation System

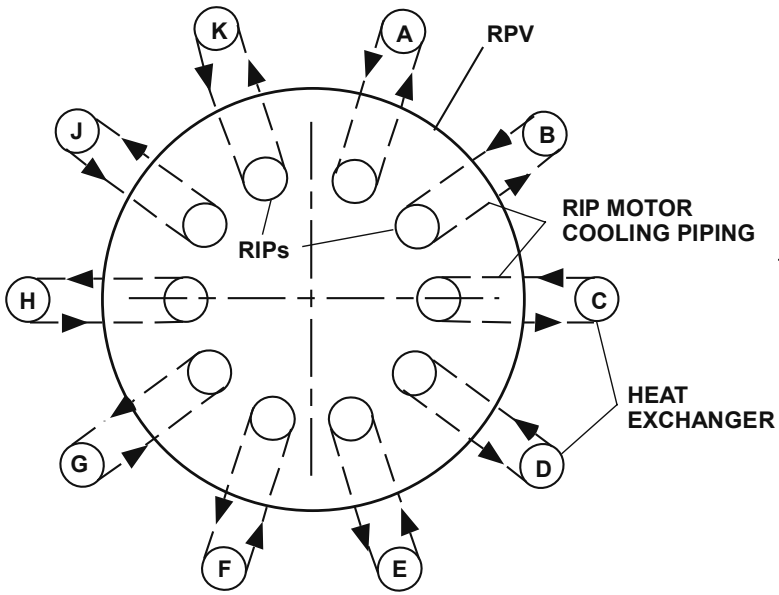

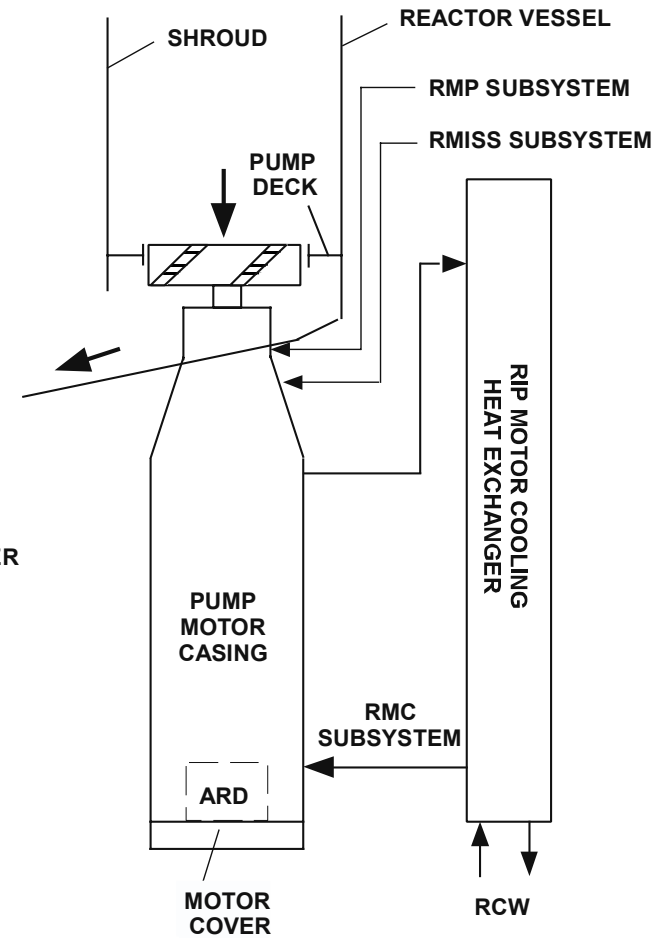

ARD = Anti-Reverse Rotation Device
RCW = Reactor Building Cooling Water
RMC = Recirculation Motor Cooling
RMISS = Recirculation Motor Inflatable Shaft Seal
RMP = Recirculation Motor Purge

Copyright © 2007 by GE Energy / Nuclear

ABWR Power Flow Map

- Normal ops in Region **IV** (forced core flow)
- Curve **B** is normal plant Startup & Shutdown path
- Region **II** avoided; excess moisture carryover may occur
- Region **III** avoided; core instability may occur

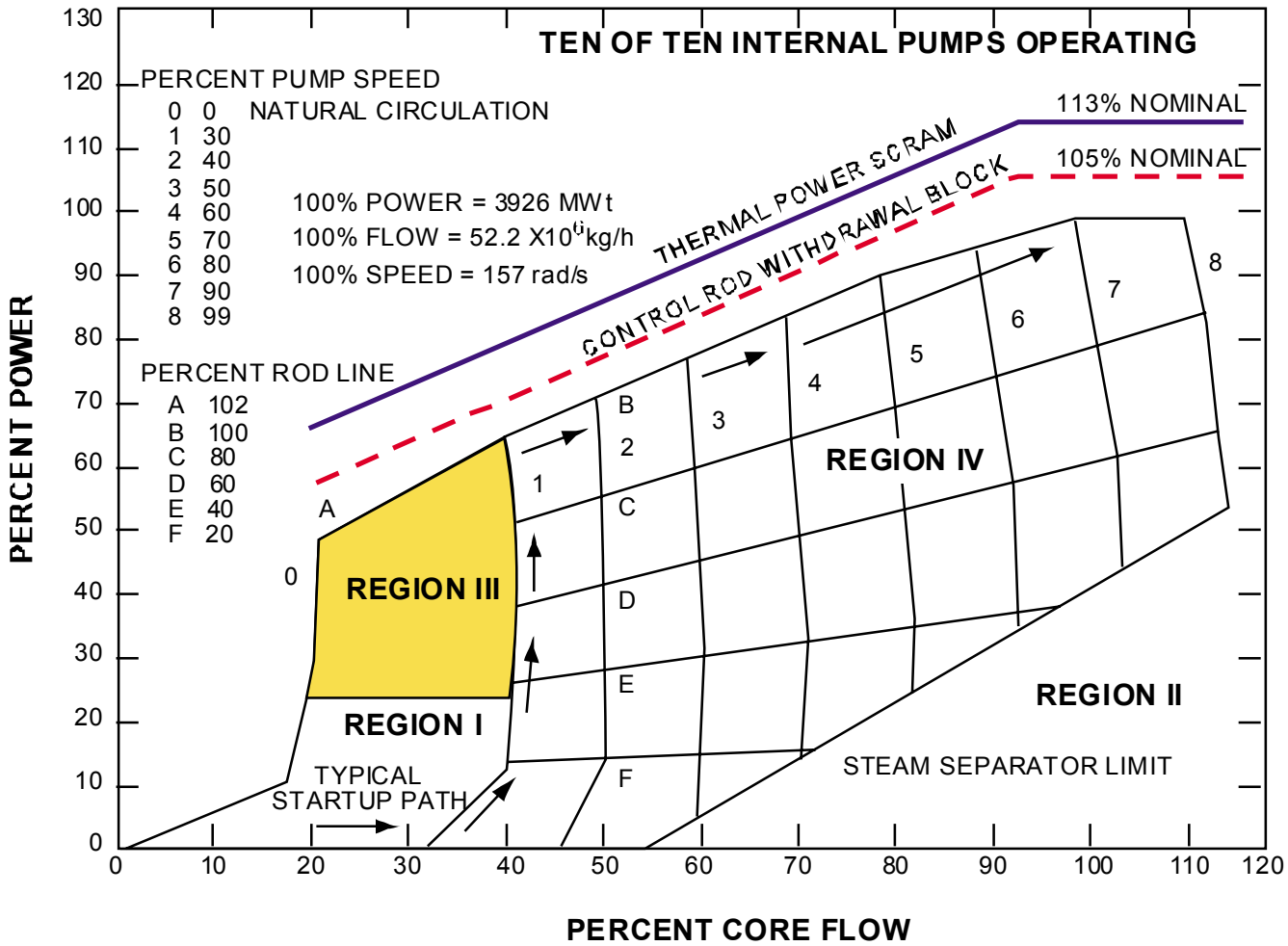

Copyright © 2007 by GE Energy / Nuclear

RPV Orificed Fuel Supports

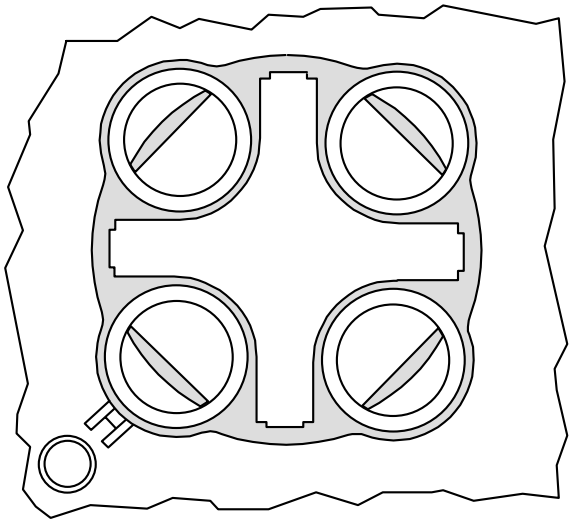

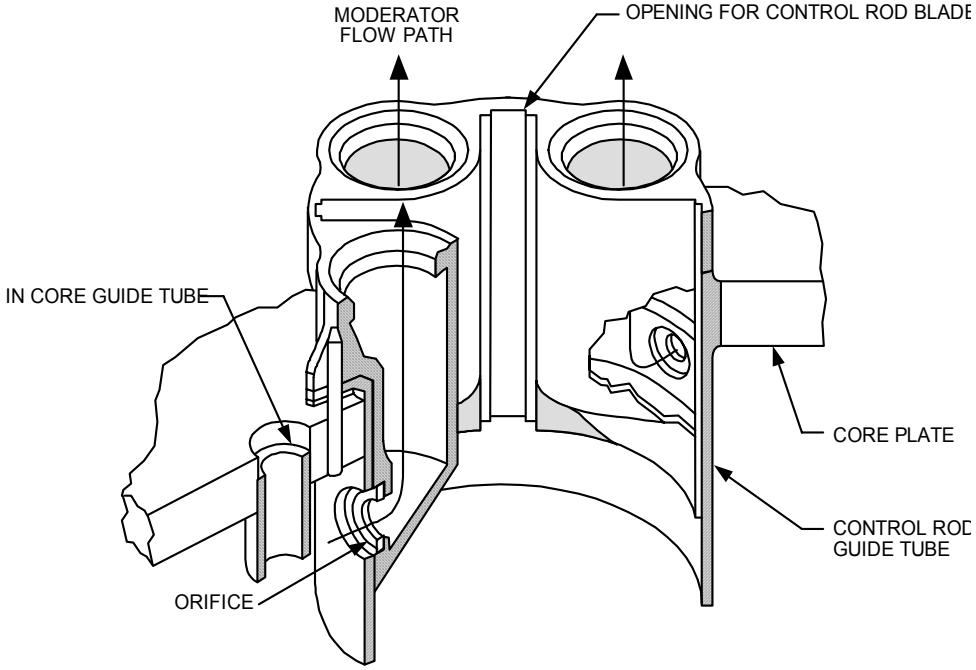

Copyright © 2007 by GE Energy / Nuclear

Fine Motion Control Rod Drive (FMCRD)

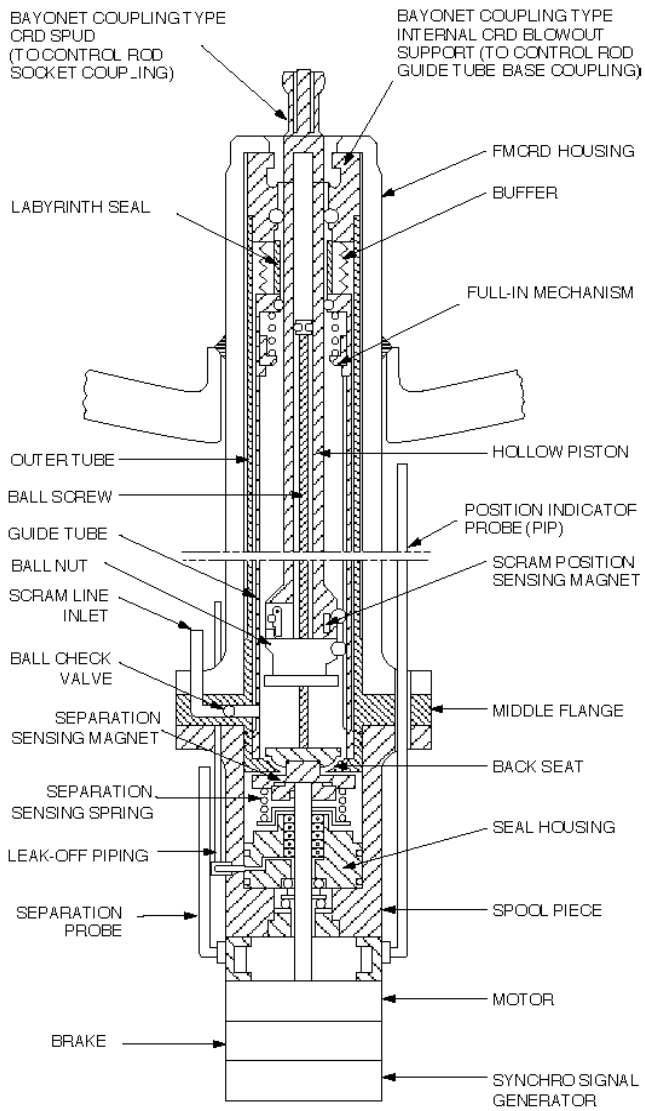

Key Design Features

- Electro-hydraulic design
- Gang rod movement of up to 26 rods possible
- Small step size of ~1.9 cm (~0.75 in)
- Internal restraint to prevent blowout (no external restraints required)
- Clean water purge flow
- Capability to detect drive/blade separation
- Electro-mechanical brake to prevent rod runout on pressure boundary failure

Key benefits:

- Provides fine rod motion during normal operation
  - Small power changes
- Improved startup time & power maneuvering
- Diverse shutdown capability
  - Hydraulic with electrical backup
- Reactivity accidents eliminated
  - Rod drop & Rod ejection

Copyright © 2007 by GE Energy / Nuclear

Control Rod

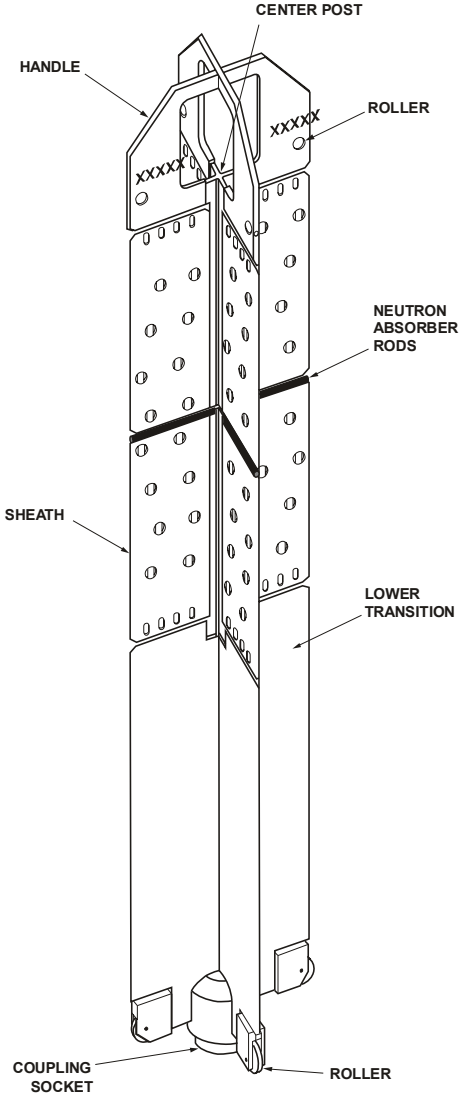

Copyright © 2007 by GE Energy / Nuclear

Axial Location of Incore Components

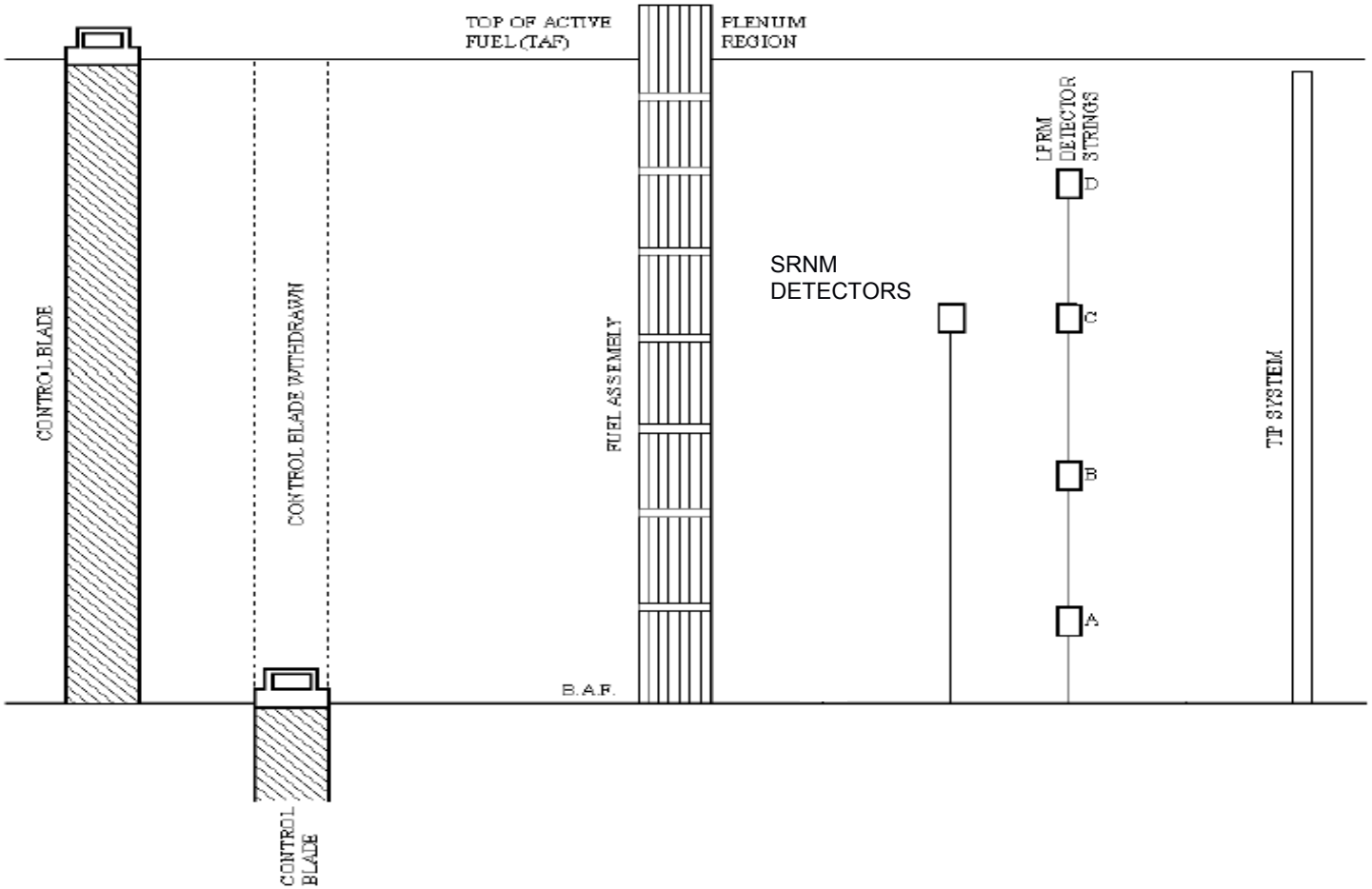

Copyright © 2007 by GE Energy / Nuclear

ABWR Uses Standard Fuel and Core Designs

- ABWR can use any BWR fuel product design available
  - Barrier cladding
  - Axially zoned enrichment and gadolinia
  - High exposure
  - Control Cell Core
  - 18 to 24 month cycles
- ABWR has unique advantages
- Large thermal margins
  - Wider water gap, milder transients
- More spectral shift capability
  - Ten RIPs can provide 110% core flow capability
- Faster startup and power maneuvering
  - FMCRDs can be ganged together in larger groups
- Stability enhanced
  - Lower magnitude of void coefficient
  - Tighter core inlet orificing

Copyright © 2007 by GE Energy / Nuclear

ABWR Core Configuration

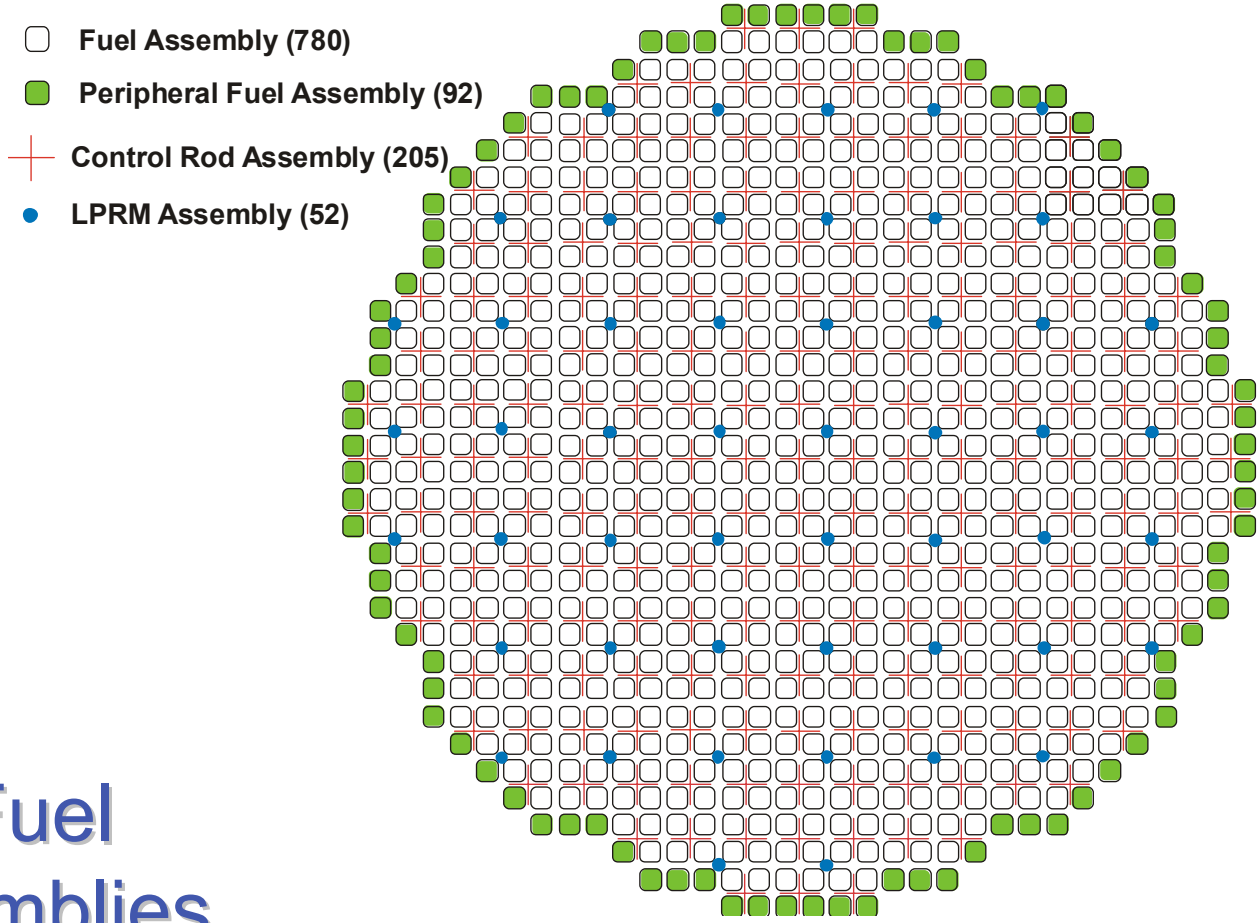

872 Fuel Assemblies

Copyright © 2007 by GE Energy / Nuclear

BWR Core Design

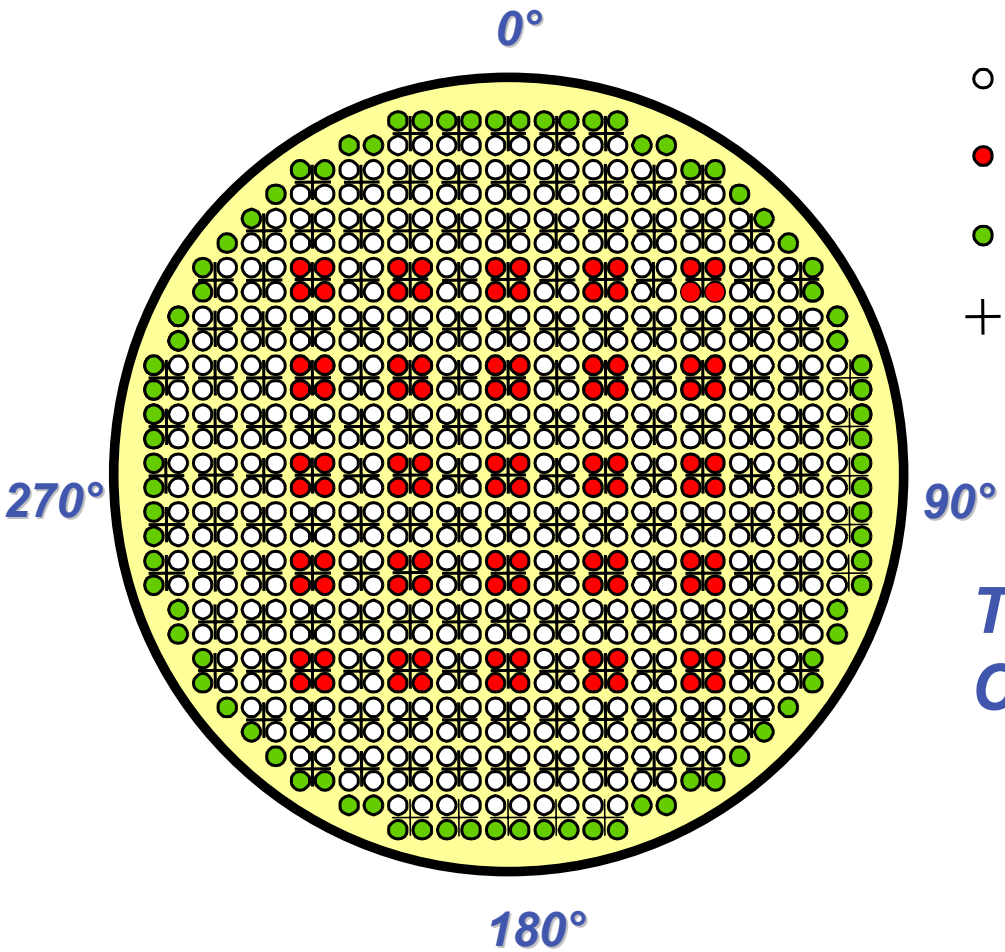

- ○ Fuel Bundle
- ● Control Cell Bundle
- ● Peripheral Bundle
- + Control Blade

Typical Control Cell Core (CCC) Layout

> Low reactivity bundles are placed in the control cells (CC)

> Control rod movement done with CC rods during operation to compensate for burnup

Copyright © 2007 by GE Energy / Nuclear

Four Bundle Array

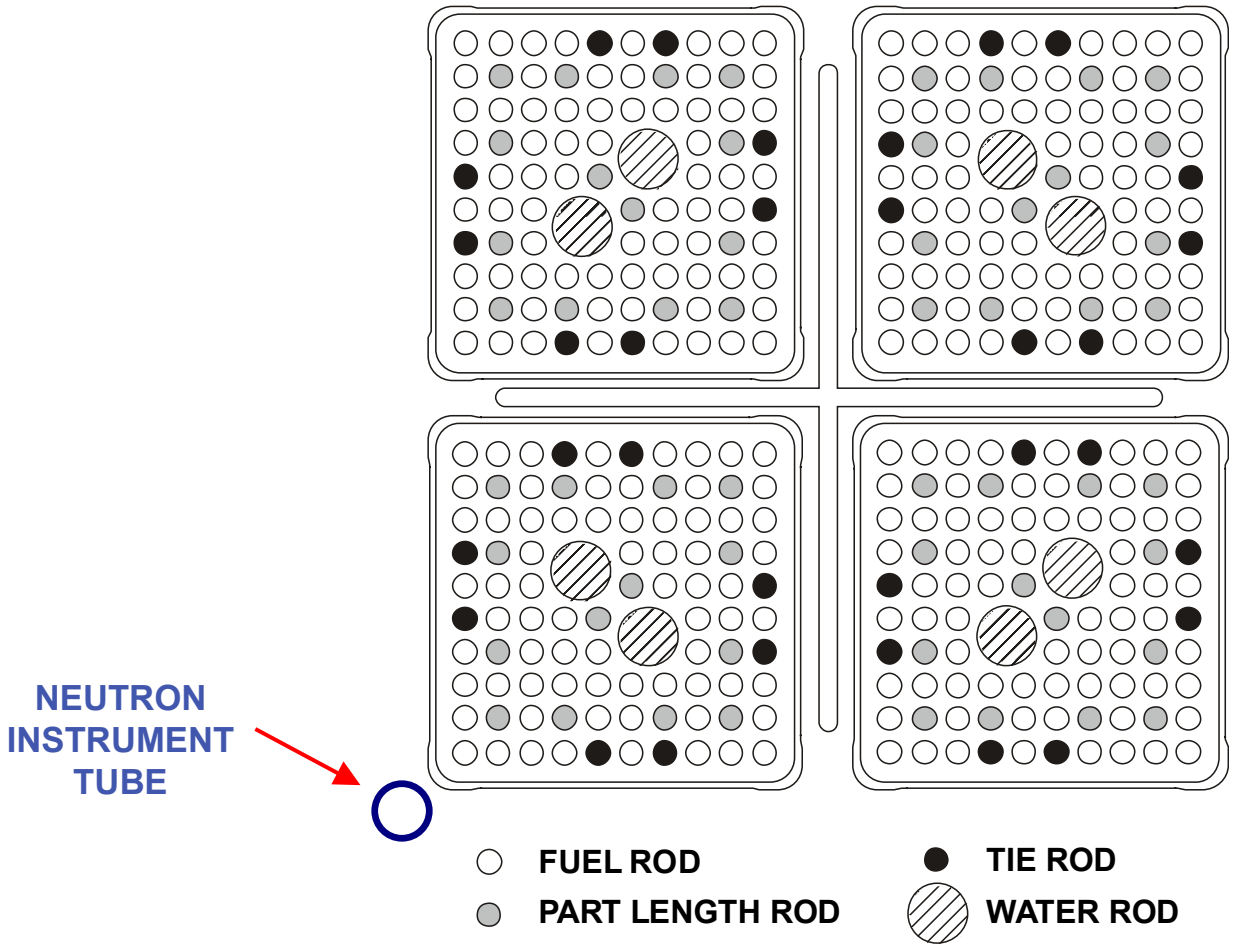

Copyright © 2007 by GE Energy / Nuclear

GE14 Fuel Bundle (10x10)

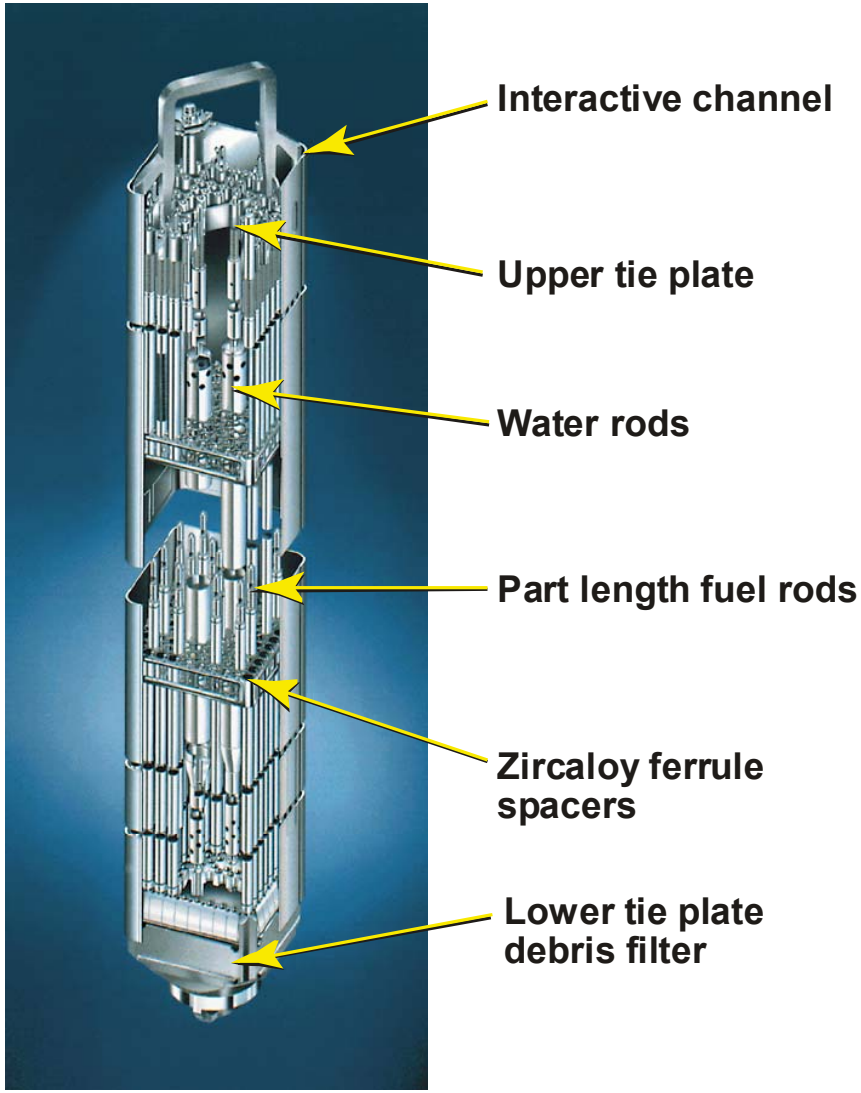

Copyright © 2007 by GE Energy / Nuclear

ABWR Reference Fuel Bundle Design

- GE14 Design
  - Proven Components
  - Supports High Energy Cycles
  - Supports High Exposure
- 14 Part Length Rods
  - Improved Pressure Drop
  - Improved Stability
  - Improved Shutdown Margin
  - Improved Fuel Efficiency
- Natural Uranium Blankets
- Power Shaping Zone
  - Additional Gad. at Bottom
  - Helps Control Power Shape
- Supports 24 month Cycle
  - Large Cold Shutdown Margin
  - Large CPR Margin
  - Large KW/ft Margin

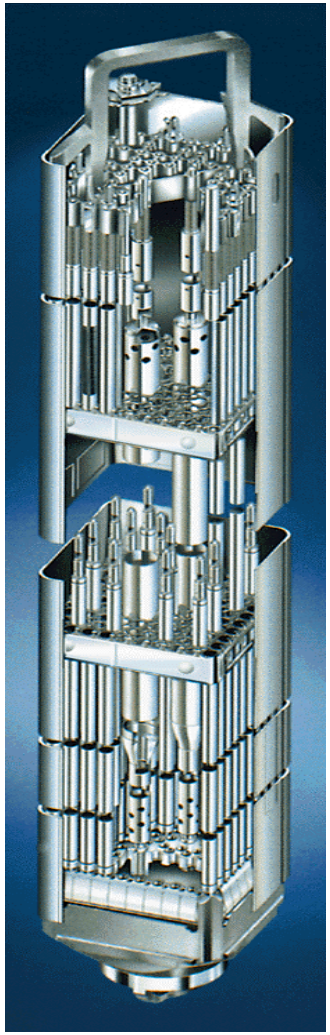

Copyright © 2007 by GE Energy / Nuclear

Other Fuel Assembly Features

- **Interactive Channel**
  - **Protects Fuel Rods & Spacers**
  - **Directs Coolant Flow Upward**
  - **Thick-Thin Design Minimizes Material**
  - **Increases Moderator in Bypass Region**
  - **Increases Control Rod Clearance**
- **Debris Filter Lower Tie Plate**
  - **Defends Against Debris Entry and Fretting**
  - **Improves Stability**
- **Low Pressure Drop Upper Tie Plate**

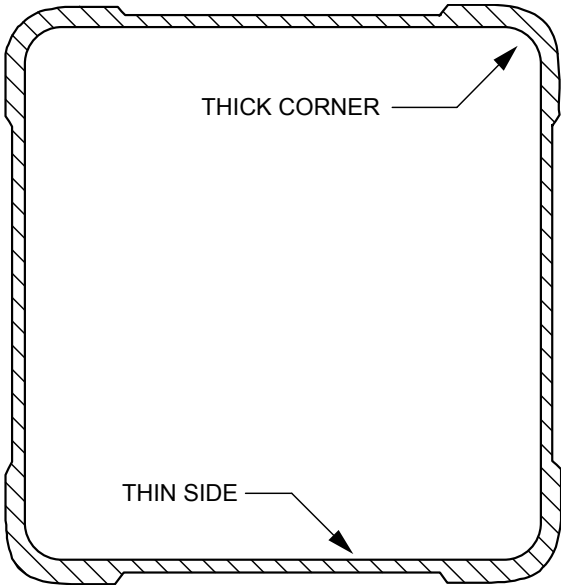

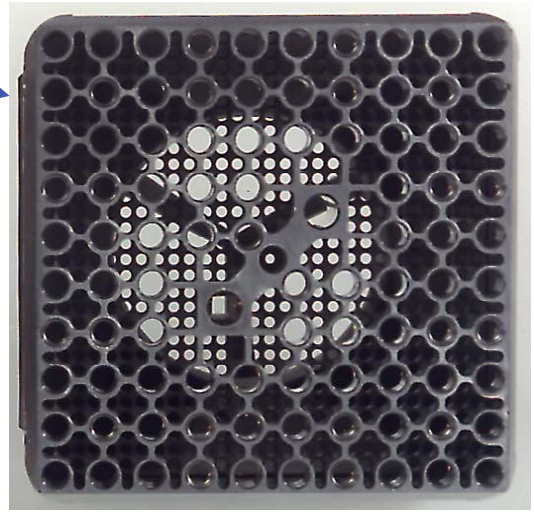

Copyright © 2007 by GE Energy / Nuclear

Channel Fastener Assembly

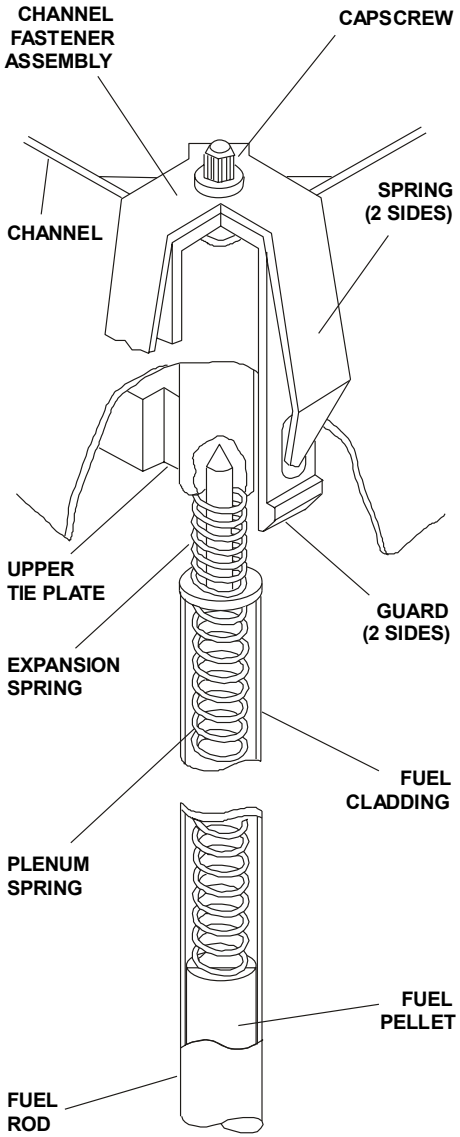

Copyright © 2007 by GE Energy / Nuclear

BWR Advantages

- Boiling Thermodynamics
  - Low coolant saturation temperature
  - High heat transfer coefficients
  - Neutral water chemistry
- Inherent advantages due to large negative moderator density (“VOID”) coefficient of reactivity
  - Ease of control using changes in core flow for load following
  - Inherent self-flattening of radial power distribution
  - Spatial xenon stability
  - Ability to override xenon to follow load

Copyright © 2007 by GE Energy / Nuclear

Comparison of BWR Events

Event	Characteristics
Transients	Strong nuclear/thermal hydraulic coupling for a few seconds Water level maintenance long-term
Loss-of-Coolant Accidents	No nuclear coupling Water level maintenance long-term
Anticipated Transients Without scram (ATWS)	Strong nuclear/thermal hydraulic coupling until liquid boron shutdown (~20 minutes)

Copyright © 2007 by GE Energy / Nuclear

LOCA Water Level Response

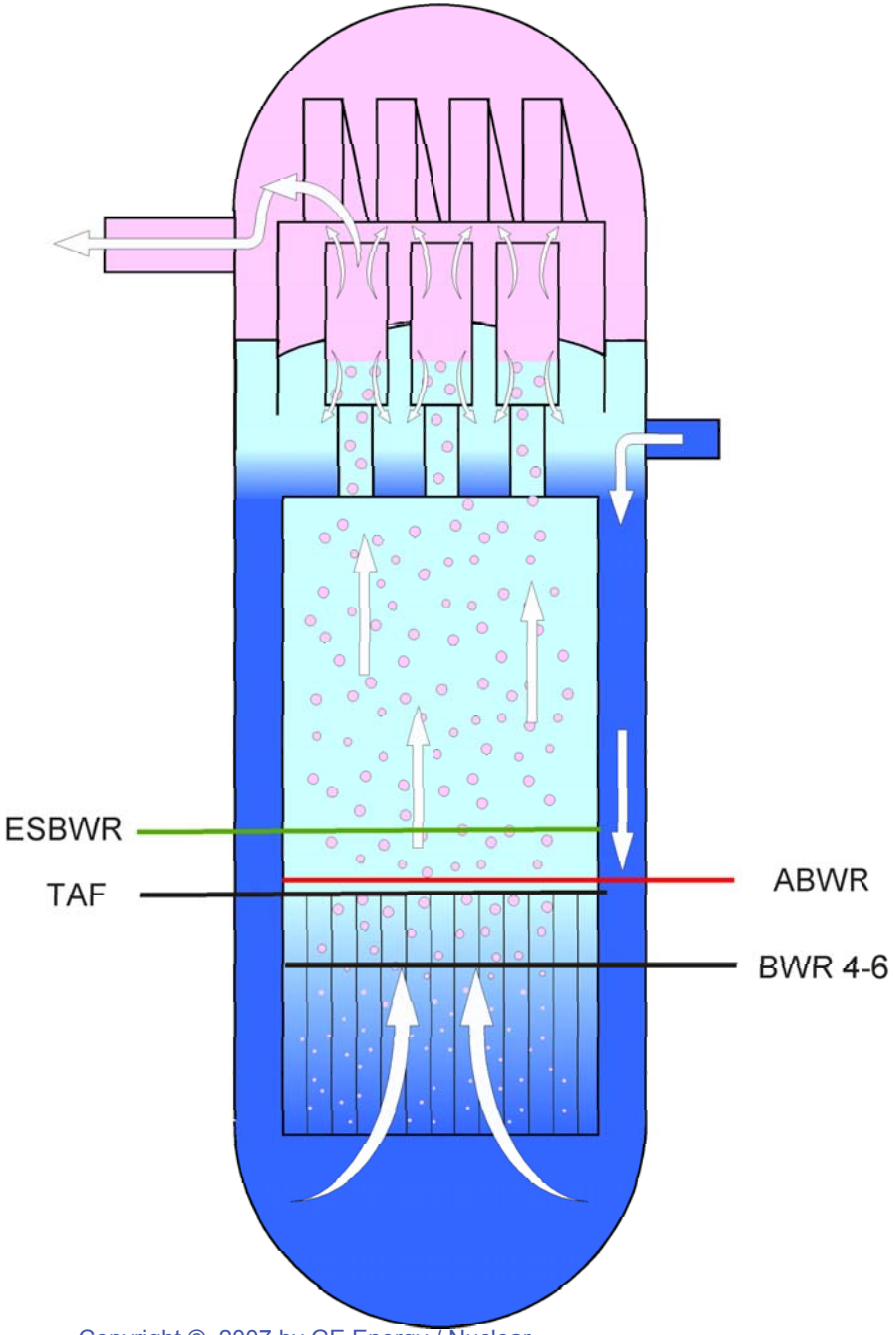

Copyright © 2007 by GE Energy / Nuclear

Thermal Design Objectives

- Overpressure
  - Show ASME Code compliance for reactor pressure
- Transients
  - Avoid clad overheating during normal operation & expected transients
    - » Minimum Critical Power Ratio (MCPR)
    - » Avoid fuel damage due to excessive cladding strain resulting from UO_2 expansion
  - Maintain less than 1% plastic strain: 25 kW/ft (82 kW/m)
    - » Normal peak pellet < 13.4 kW/ft (44 kW/m)
- Accidents
  - Meet 10CFR50.46 limits
    - » Fuel clad temperature < 2200°F
    - » Local oxidation < 17%
    - » Average oxidation <1%

Copyright © 2007 by GE Energy / Nuclear

BWR Transition Boiling

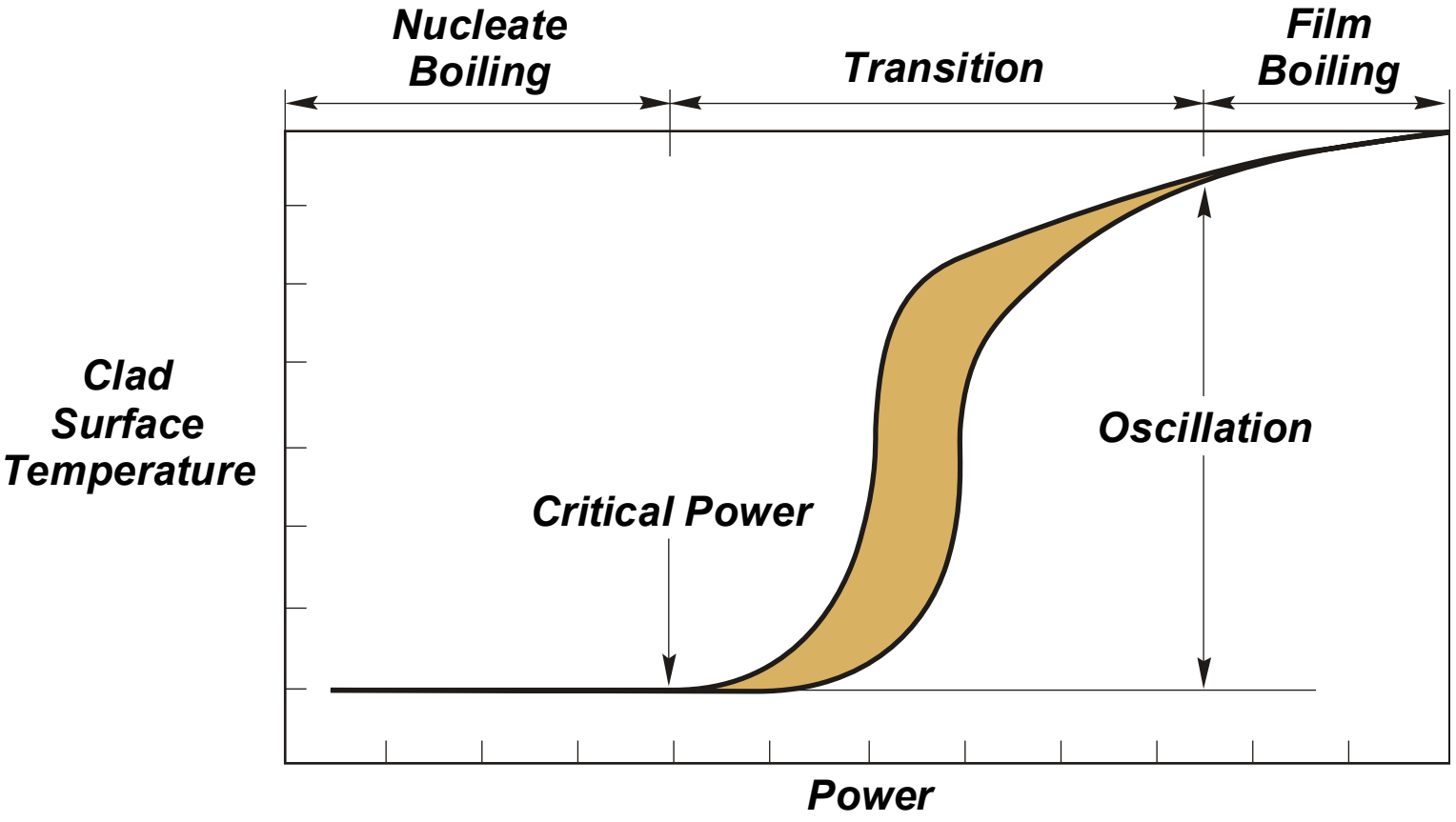

Copyright © 2007 by GE Energy / Nuclear

Determination of Critical Power

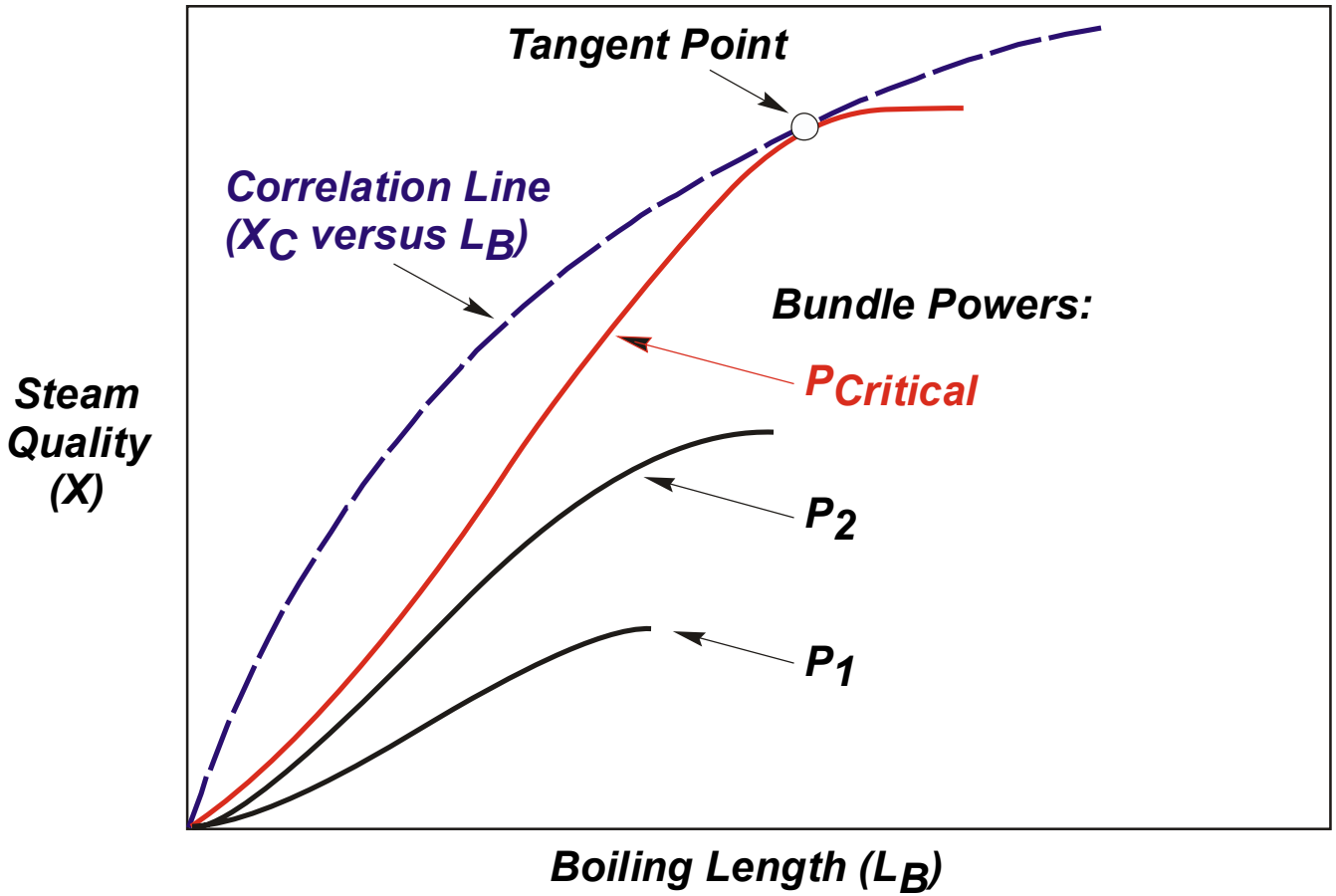

Copyright © 2007 by GE Energy / Nuclear

MCPR Design Criterion

Transients caused by single operator error or equipment failure shall be limited such that, considering uncertainties in monitoring core operating state, more than 99.9% of fuel rods would be expected to avoid Boiling Transition. (Boiling Transition does not mean fuel failure).

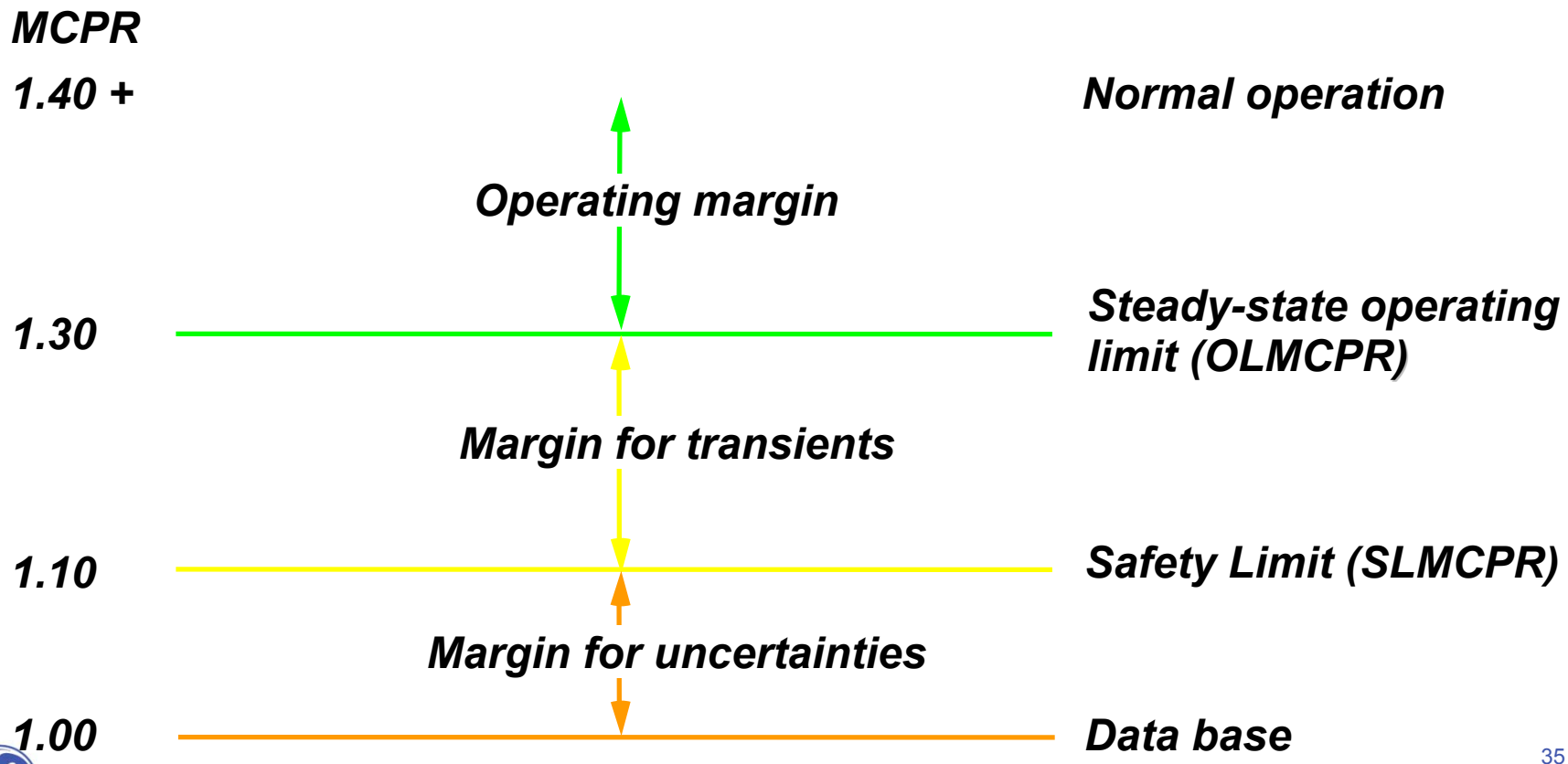

Copyright © 2007 by GE Energy / Nuclear

Equilibrium Cycle Loading Pattern (example)

- 2 year cycle
- 37% fresh fuel
  - 2 enrichments
- Core flow spectral shift

Bundle IAT
Average Exposure (GWd/ST)

	1	2	3	4	5	6	7	8	9	10	11	12	13	14	15	16	17	
1															3 40.140	3 39.616	3 38.258	68
2												1 40.120	3 39.223	1 39.036	1 36.789	3 34.590	1 35.805	66
3											1 39.455	3 38.507	3 36.860	1 17.661	1 18.297	3 34.747	3 23.140	64
4								3 39.344	3 39.678	1 39.819	3 35.831	1 31.990	3 17.865	1 15.203	3 18.035	1 19.296	3 22.154	62
5							1 39.528	1 36.463	3 35.604	3 32.991	3 22.074	3 0.000	3 0.000	3 0.000	3 0.000	3 0.000	3 0.000	60
6						1 38.204	1 38.209	1 16.806	3 21.781	3 0.000	3 0.000	3 0.000	1 21.033	3 0.000	3 19.733	3 0.000	3 21.826	58
7					3 37.703	1 37.672	3 34.991	1 15.122	3 0.000	1 19.348	3 0.000	1 19.585	3 0.000	3 22.608	3 0.000	3 22.943	3 0.000	56
8				3 39.966	3 36.599	1 16.851	1 15.176	3 0.000	3 19.041	3 0.000	3 19.520	3 0.000	3 20.708	1 0.000	1 20.237	1 0.000	1 21.148	54
9				3 39.532	3 36.860	3 21.380	3 0.000	3 19.021	3 0.000	1 20.931	3 0.000	3 19.544	1 0.000	1 20.650	1 0.000	3 20.363	1 0.000	52
10				1 39.798	1 32.543	3 0.000	1 19.189	3 0.000	1 20.848	3 0.000	1 21.038	1 0.000	3 20.834	1 0.000	1 21.150	1 0.000	1 16.496	50
11			3 39.905	1 36.685	1 21.926	3 0.000	3 0.000	3 19.608	3 0.000	3 20.932	1 0.000	1 22.309	1 0.000	3 20.903	1 0.000	3 21.486	1 0.000	48
12		1 39.734	3 38.666	3 33.076	3 0.000	3 0.000	1 19.617	3 0.000	3 20.142	1 0.000	1 22.443	1 0.000	3 22.801	1 0.000	1 20.775	1 0.000	3 21.949	46
13		3 38.114	3 36.017	3 17.949	3 0.000	1 20.998	3 0.000	1 20.624	1 0.000	3 20.966	1 0.000	3 22.808	1 0.000	3 21.992	1 0.000	1 20.545	1 0.000	44
14		3 39.960	1 18.307	1 16.113	3 0.000	3 0.000	1 22.272	1 0.000	3 20.550	1 0.000	1 20.809	1 0.000	3 21.783	1 0.000	1 29.675	1 0.000	1 30.355	42
15	1 39.549	1 35.891	3 17.479	3 18.037	3 0.000	3 19.285	3 0.000	1 20.280	1 0.000	1 21.220	1 0.000	1 20.751	1 0.000	3 30.662	1 0.000	1 30.713	1 0.000	40
16	3 39.564	3 35.803	3 34.699	3 19.309	3 0.000	3 0.000	1 22.594	1 0.000	3 20.609	1 0.000	3 21.709	1 0.000	3 20.539	1 0.000	1 31.020	1 0.000	3 20.984	38
17	3 38.993	1 35.800	1 29.406	3 22.620	3 0.000	1 21.560	3 0.000	1 21.180	1 0.000	1 16.479	1 0.000	1 21.836	1 0.000	1 30.704	1 0.000	3 20.823	1 31.623	36
	01	03	05	07	09	11	13	15	17	19	21	23	25	27	29	31	33	

imagination at work

Copyright © 2007 by GE Energy / Nuclear

Equilibrium Cycle CR Patterns

200 MWd/ST

	1	3	5	7	9	11	13	15
1								
3								
5								50
7								
9					160		35	
11								
13					35			40
15								
17			50				40	

1000 MWd/ST

	1	3	5	7	9	11	13	15	17
1									
3									
5									50
7									
9					160		35		
11									
13					35				45
15									
17			50				45		

2000 MWd/ST

	1	3	5	7	9	11	13	15	17
1									
3									
5									40
7									
9					170		25		
11									
13					25				45
15									
17			40				45		

7000 MWd/ST

	1	3	5	7	9	11	13	15	17
1									
3									
5									
7					35		160		30
9									
11					160		30		
13									
15			160		40		50		50
17									

8000 MWd/ST

	1	3	5	7	9	11	13	15	17
1									
3									
5									
7					30		160		30
9									
11					160		25		160
13									
15			160		25		40		40
17									

9000 MWd/ST

	1	3	5	7	9	11	13	15	17
1									
3									
5									
7					20		160		20
9									
11							20		160
13									
15			160		30		40		40
17									

3000 MWd/ST

	1	3	5	7	9	11	13	15	17
1									
3									
5									40
7									
9							25		
11									
13					25				45
15									
17			40				45		

3000 MWd/ST

	1	3	5	7	9	11	13	15	17
1									
3									
5									
7									
9						160		25	
11									
13						22		30	
15									
17				30				30	

4000 MWd/ST

	1	3	5	7	9	11	13	15	17
1									
3									
5									
7									
9						160		25	
11									
13						22		30	
15									
17				30				30	

9000 MWd/ST

	1	3	5	7	9	11	13	15	17
1									
3									
5									
7								45	
9									
11						60		40	
13									
15				45		40		40	
17									

10000 MWd/ST

	1	3	5	7	9	11	13	15	17
1									
3									
5									
7								45	
9									
11							38		40
13									
15				45		40		40	
17									

11000 MWd/ST

	1	3	5	7	9	11	13	15	17
1									
3									
5									
7								45	
9									
11							35		40
13									
15				45		40		40	
17									

5000 MWd/ST

	1	3	5	7	9	11	13	15	17
1									
3									
5									
7									
9						160		20	
11									
13						20		30	
15									
17				30				30	

6000 MWd/ST

	1	3	5	7	9	11	13	15	17
1									
3									
5									
7									
9						160		20	
11									
13						160		20	
15									
17				20				20	

6000 MWd/ST

	1	3	5	7	9	11	13	15	17
1									
3									
5									
7									
9					35				40
11									
13					160		50		
15									
17					40		50		50

12000 MWd/ST

	1	3	5	7	9	11	13	15	17
1									
3									
5									
7								45	
9									
11						40		40	
13									
15				45		40		40	
17									

12000 MWd/ST

	1	3	5	7	9	11	13	15	17
1									
3									
5									
7									
9					0				0
11									
13							0		0
15									
17					0		0		0

13000 MWd/ST

	1	3	5	7	9	11	13	15	17
1									
3									
5									
7									
9					20				30
11									
13							30		30
15									
17					30		30		30

14000 MWd/ST

	1	3	5	7	9	11	13	15	17
1									
3									
5									
7									
9									30
11									
13							20		40
15									
17					30		40		50

15000 MWd/ST

	1	3	5	7	9	11	13	15	17
1									
3									
5									
7									
9									
11									
13							30		
15									
17									40

0 Fully In **200** Fully-Out

Copyright © 2007 by GE Energy / Nuclear

Power Shapes at BOC

													0.293	0.314	0.331
										0.304	0.399	0.502	0.542	0.575	0.568
									0.406	0.513	0.655	0.91	0.956	0.8	0.886
						0.322	0.397	0.5	0.622	0.764	1.026	1.136	1.134	1.079	0.992
					0.413	0.537	0.661	0.758	0.957	1.057	1.14	1.18	1.182	1.095	0.798
				0.442	0.591	0.949	1.012	1.098	1.142	1.208	1.215	1.269	1.239	1.178	0.844
			0.421	0.591	0.816	1.148	1.216	1.239	1.289	1.28	1.307	1.243	1.307	1.22	1.223
		0.317	0.539	0.946	1.147	1.251	1.289	1.345	1.322	1.325	1.223	1.217	1.264	1.295	1.293
		0.395	0.653	1.008	1.213	1.286	1.309	1.274	1.349	1.246	0.909	0.888	1.218	1.293	1.321
		0.494	0.75	1.092	1.234	1.341	1.273	1.317	1.286	1.222	0.887	0.891	1.194	1.293	1.373
	0.402	0.606	0.944	1.133	1.281	1.316	1.345	1.289	1.29	1.222	1.185	1.175	1.233	1.247	1.261
0.295	0.5	0.746	1.043	1.196	1.269	1.318	1.238	1.217	1.218	1.252	1.207	1.222	1.205	1.196	1.144
0.385	0.639	1.001	1.121	1.201	1.296	1.211	0.903	0.883	1.182	1.203	1.226	1.18	1.16	1.077	0.799
0.479	0.877	1.101	1.157	1.252	1.227	1.206	0.885	0.887	1.167	1.219	1.179	1.147	0.975	1.007	0.663
0.274	0.515	0.921	1.098	1.155	1.22	1.292	1.251	1.208	1.187	1.229	1.201	1.154	0.967	1.04	0.892	0.952
0.289	0.527	0.75	1.037	1.063	1.157	1.201	1.282	1.282	1.286	1.24	1.192	1.076	1.001	0.888	1.022	1.041
0.3	0.517	0.753	0.935	0.77	0.825	1.208	1.279	1.311	1.366	1.256	1.137	0.795	0.659	0.949	1.04	0.953

Radial Power

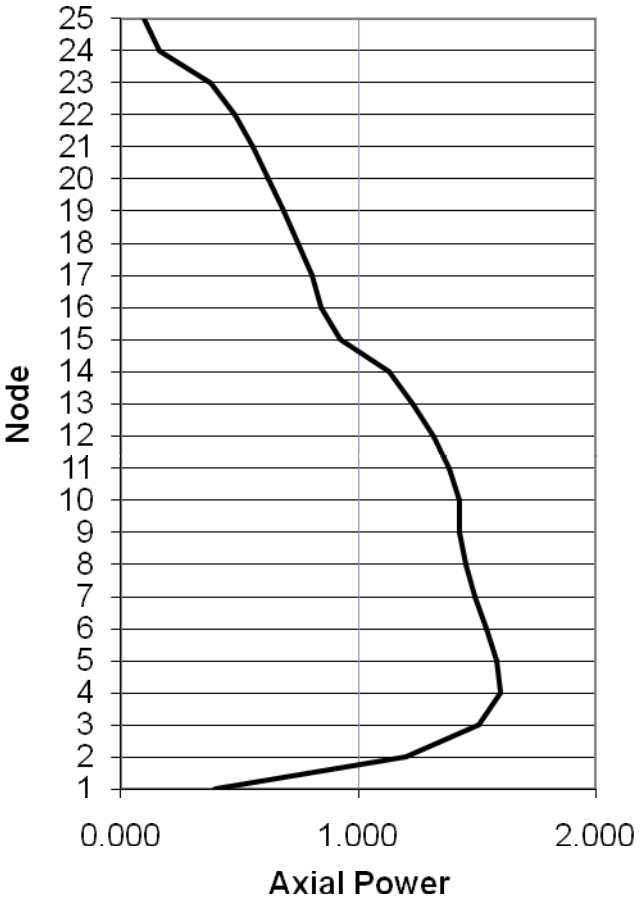

Copyright © 2007 by GE Energy / Nuclear

Power Shapes at MOC

													0.233	0.254	0.269
										0.251	0.332	0.415	0.45	0.478	0.477
									0.337	0.444	0.57	0.783	0.823	0.705	0.795
						0.215	0.285	0.394	0.539	0.694	0.944	1.052	1.064	1.042	1.013
					0.266	0.367	0.477	0.611	0.857	1.125	1.255	1.338	1.37	1.35	1.317
				0.297	0.408	0.654	0.709	0.94	1.144	1.299	1.193	1.444	1.275	1.425	1.175
			0.308	0.439	0.598	0.807	0.734	0.749	1.244	1.201	1.401	1.22	1.484	1.199	1.036
		0.251	0.431	0.755	0.914	1.064	0.782	0.94	1.164	1.446	1.245	1.457	1.302	1.441	0.941
		0.335	0.563	0.882	1.177	1.115	1.294	1.153	1.44	1.299	1.489	1.31	1.523	1.334	1.462
		0.446	0.7	1.153	1.158	1.41	1.228	1.459	1.269	1.472	1.246	1.419	1.296	1.514	1.361
	0.364	0.573	0.933	1.288	1.434	1.291	1.449	1.25	1.476	1.188	1.025	0.908	1.383	1.266	1.422
0.26	0.459	0.725	1.193	1.397	1.296	1.532	1.282	1.452	1.241	1.361	0.859	0.963	1.139	1.372	1.175
0.338	0.581	0.966	1.298	1.249	1.529	1.319	1.505	1.295	1.437	1.185	1.245	1.053	1.245	1.132	1.25
0.418	0.785	1.052	1.351	1.477	1.284	1.503	1.251	1.38	1.212	1.311	1.05	1.129	0.919	1.122	0.887
0.231	0.449	0.834	1.061	1.321	1.253	1.495	1.231	1.037	0.876	1.278	1.07	0.886	0.67	0.99	0.786	0.753
0.249	0.463	0.698	1.047	1.31	1.416	1.255	1.409	0.904	0.978	1.084	1.19	0.776	0.771	0.752	0.904	0.649
0.26	0.46	0.713	1.011	1.345	1.27	1.488	1.263	1.35	1.167	1.296	1.057	1.061	0.787	0.936	0.845	0.682

Radial Power

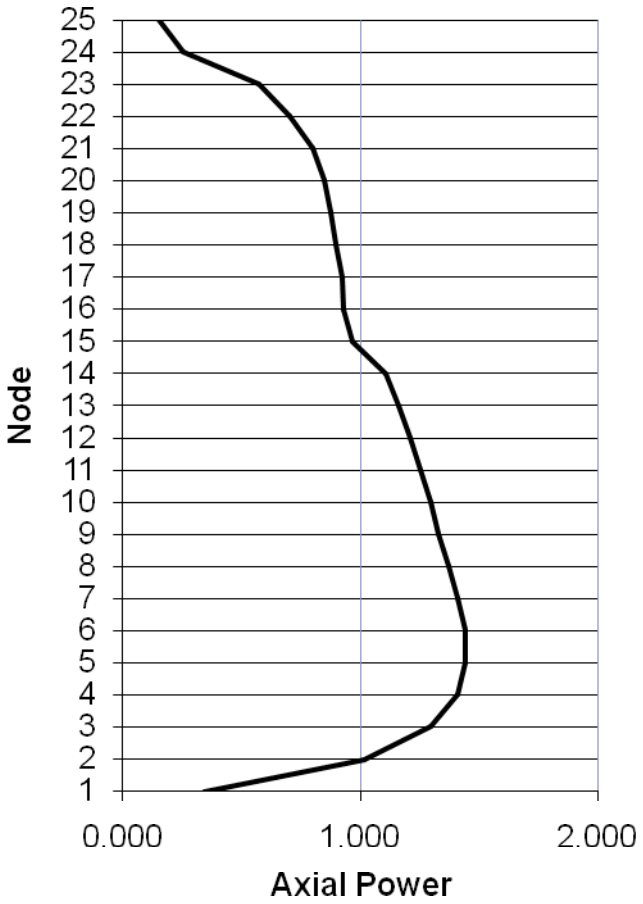

Copyright © 2007 by GE Energy / Nuclear

Power Shapes at EOC

													0.155	0.172	0.182
										0.185	0.244	0.298	0.318	0.334	0.335
									0.268	0.349	0.441	0.588	0.611	0.528	0.601
						0.193	0.26	0.351	0.464	0.58	0.766	0.831	0.85	0.835	0.829
					0.232	0.339	0.458	0.582	0.779	1.046	1.123	1.176	1.202	1.215	1.22
				0.243	0.361	0.62	0.742	1.027	1.133	1.201	1.034	1.272	1.101	1.316	1.107
			0.24	0.363	0.534	0.793	1.067	0.984	1.232	1.065	1.292	1.1	1.358	1.146	1.393
		0.189	0.339	0.611	0.786	1.065	1.002	1.245	1.091	1.308	1.126	1.361	1.176	1.422	1.2
		0.255	0.445	0.732	1.043	0.986	1.238	1.075	1.315	1.149	1.38	1.184	1.447	1.251	1.487
		0.341	0.562	1.005	0.961	1.219	1.072	1.32	1.122	1.377	1.2	1.457	1.239	1.506	1.307
	0.263	0.444	0.757	1.114	1.212	1.077	1.306	1.136	1.382	1.178	1.461	1.262	1.517	1.285	1.531
0.181	0.341	0.576	1.033	1.187	1.053	1.295	1.135	1.372	1.177	1.458	1.24	1.524	1.284	1.548	1.285
0.24	0.434	0.761	1.116	1.024	1.282	1.108	1.373	1.196	1.459	1.242	1.523	1.283	1.551	1.293	1.565
0.299	0.581	0.821	1.172	1.268	1.086	1.355	1.199	1.454	1.249	1.521	1.287	1.541	1.158	1.539	1.163
0.153	0.315	0.622	0.849	1.201	1.106	1.355	1.171	1.443	1.235	1.514	1.281	1.547	1.158	1.523	1.131	1.505
0.168	0.322	0.525	0.839	1.212	1.315	1.136	1.419	1.244	1.502	1.278	1.543	1.305	1.534	1.129	1.474	1.2
0.174	0.315	0.524	0.81	1.214	1.093	1.389	1.195	1.482	1.301	1.526	1.27	1.56	1.157	1.503	1.204	1.009

Radial Power

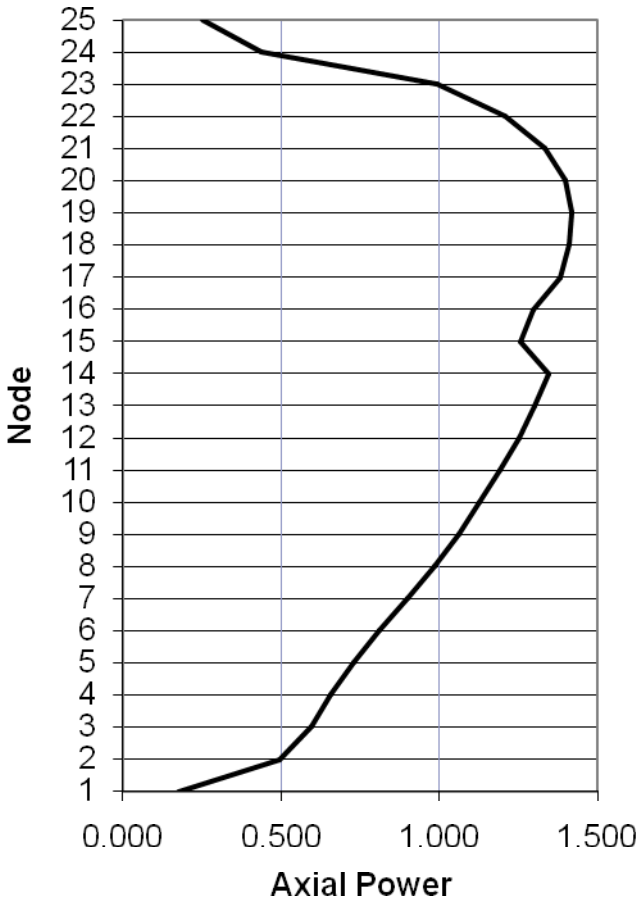

Copyright © 2007 by GE Energy / Nuclear

Equilibrium Cycle MCPR Margin

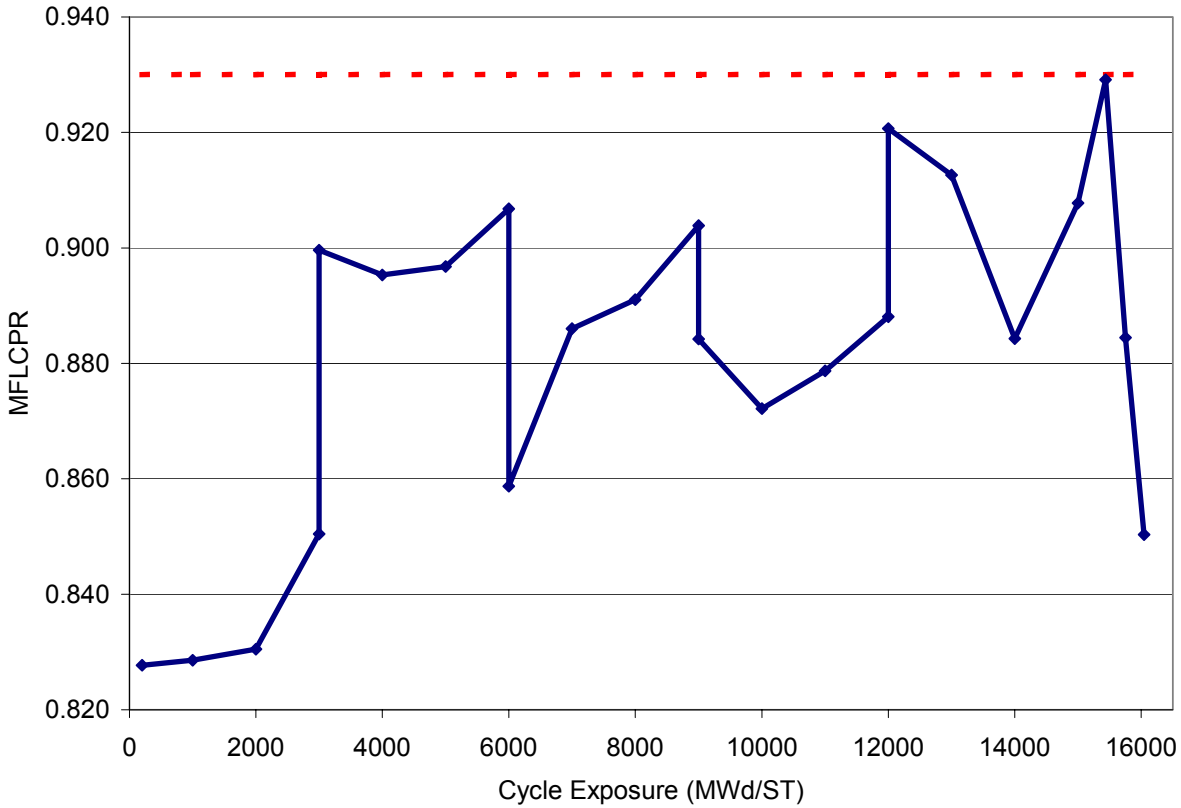

Copyright © 2007 by GE Energy / Nuclear

Equilibrium Cycle Hot Excess Reactivity

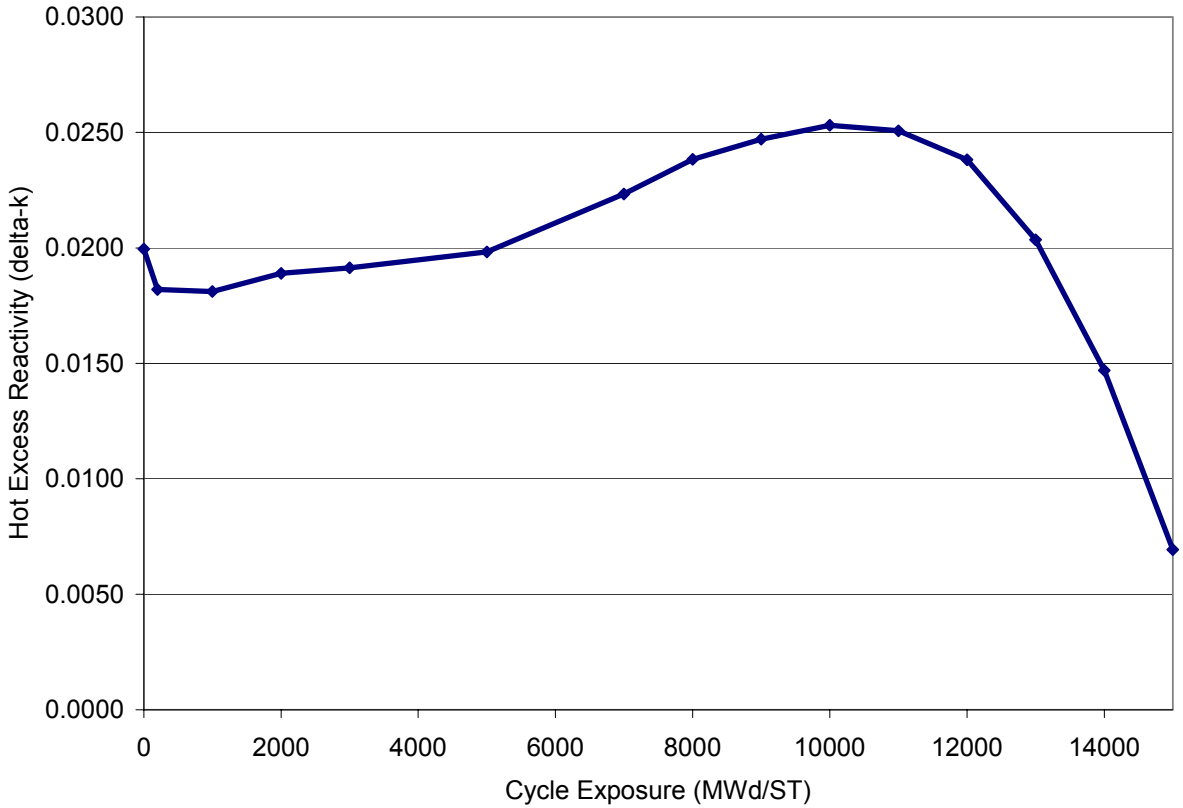

Copyright © 2007 by GE Energy / Nuclear

Equilibrium Cycle Cold Shutdown Margin

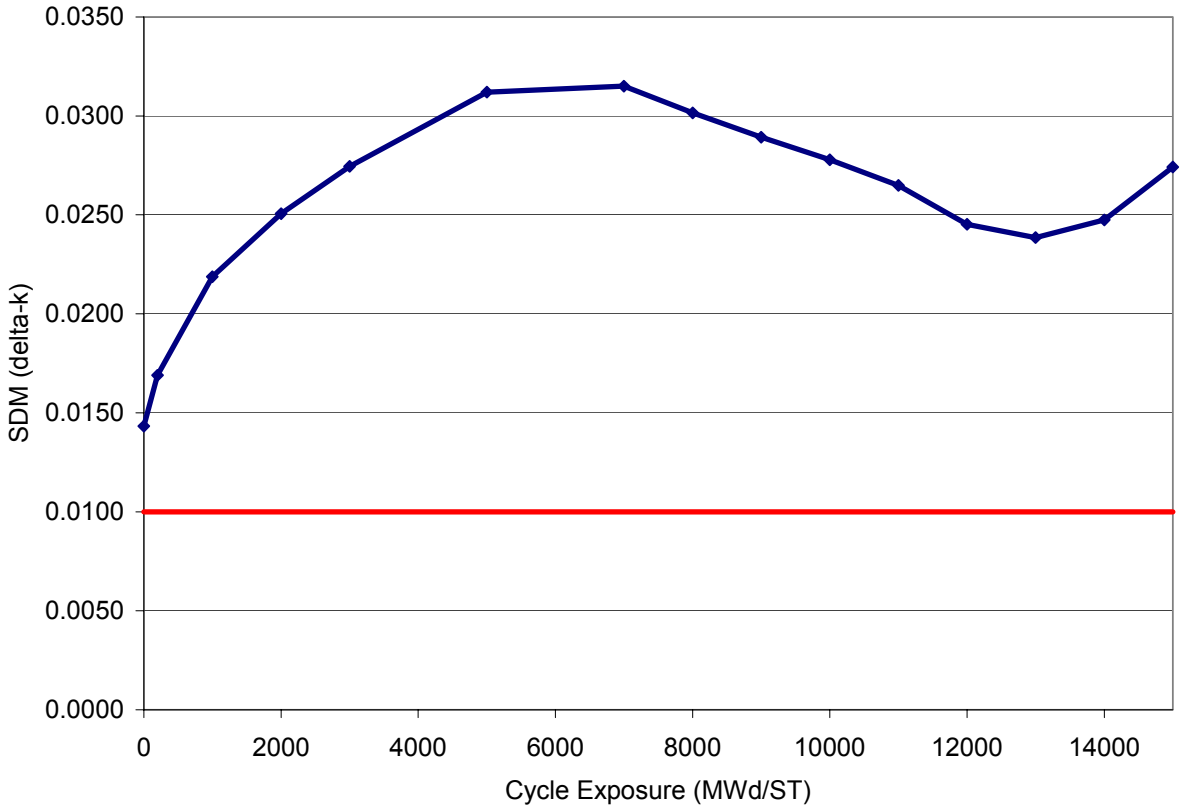

Copyright © 2007 by GE Energy / Nuclear

Reactor, Core & Neutronics Summary

- Improved Reactor Vessel & Internals
  - > Reactor Internal Pumps
  - > Fine Motion Control Rod Drives
- ABWR utilizes evolving fuel product line
  - > GNF's 10x10 fuel
- Fuel cycle lengths from 1 to 2 years can be supported
- Large thermal design margins & reactivity (hot excess & cold shutdown) design margins provide flexibility
  - > Core loading
  - > Cycle operation

Copyright © 2007 by GE Energy / Nuclear