MITSUBISHI NUCLEAR ENERGY SYSTEMS, INC.

MITSUBISHI HEAVY INDUSTRIES, LTD.

US-APWR

MITSUBISHI US-APWR

Fuel and Core Design

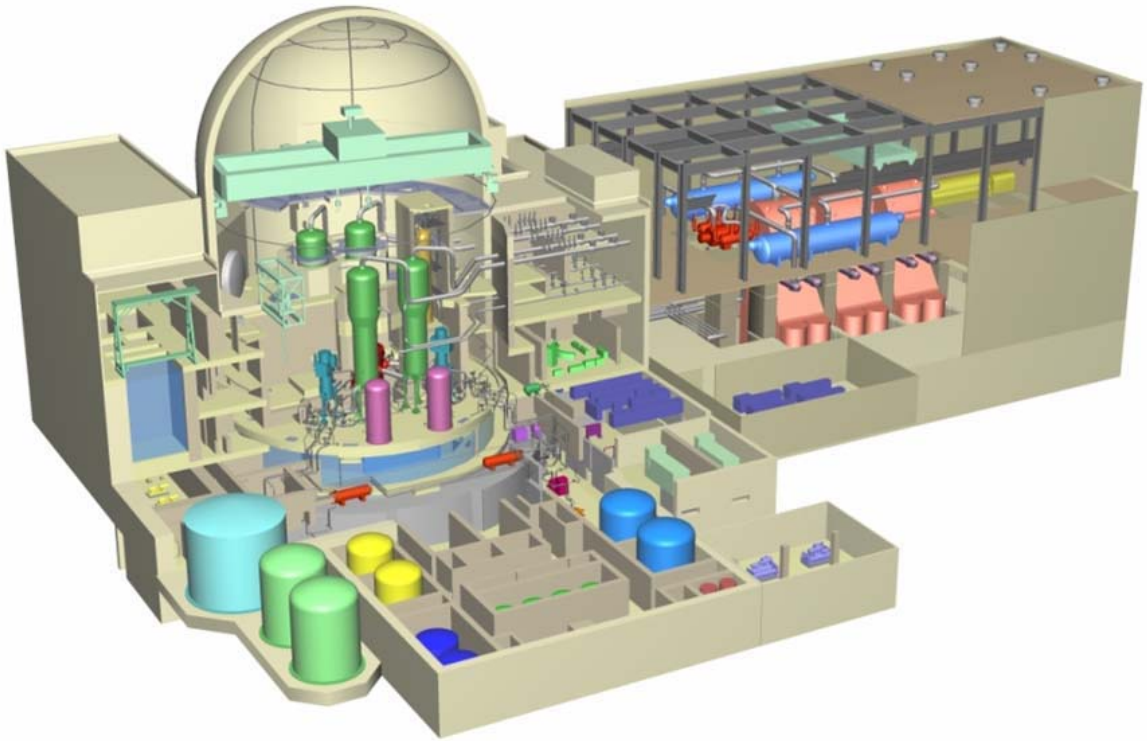

June 29, 2007

Copyright© 2007 MITSUBISHI HEAVY INDUSTRIES, LTD.

CONTENTS

1. Fuel / Core Design

(Fuel system, Nuclear, Thermal & Hydraulic)

2. Reactor Internal Design

Copyright© 2007 MITSUBISHI HEAVY INDUSTRIES, LTD.

Operation / Economy / Reliability

Design Area	Design Features		
	● Flexible Operation	● Enhanced Economy	● Improved Reliability
Fuel / Core	•High gadolinia content •Large plenum volume •14ft active length •Lower power density •High DNB design	•High density pellet •Zircaloy-4 grid	•Grid fretting resistant design •ZIRLO™ •Bottom nozzle with built-in filter
Reactor Internals	•Enlarged core barrel •LCP/LCS integration	•Neutron reflector	•Neutron reflector •Upper mounted ICIS •RVH cooling

Copyright© 2007 MITSUBISHI HEAVY INDUSTRIES, LTD.

Fuel Assembly Design

- Flexible Operation
- Enhanced Economy
- Improved Reliability

17x17 Fuel rods array

14ft Fuel active length

In-core instrumentation guide tube

Control rod guide thimble

Bottom grid spacer

Bottom nozzle
Anti-debris design with built-in filter

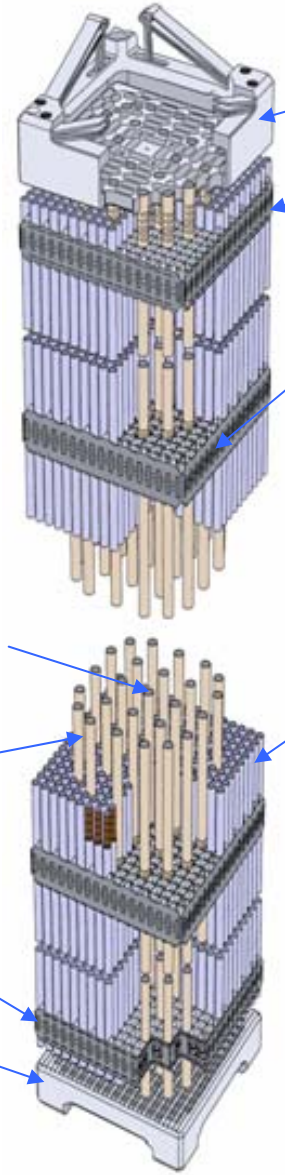

Top nozzle

Top grid spacer

Intermediate grid spacer
- High DNB performance design
- Shorter grid spacing with 11 grids
- Fretting resistant spring
- Zircaloy-4

Fuel rod
- Higher density pellet (97%TD)
- Corrosion resistant cladding Material (ZIRLO™)
- Higher gadolinia content pellet (10wt%)
- Large plenum volume
- Lower power density

Copyright© 2007 MITSUBISHI HEAVY INDUSTRIES, LTD.

Fuel Design Specification

Fuel Assembly	US-APWR	Fuel in US
Fuel Rods Array in Fuel Assembly	17 x 17	←
Number of Fuel Rods per Fuel Assembly	264	←
Number of Control Rod Guide Thimbles	24	←
Number of in-core Instrumentation guide tube	1	←
Number of Spacer Grids	11	10*
Fuel Rod		
Outside Diameter	0.374 in.	←
Cladding Thickness	0.022 in.	←
Active Fuel Length	13.8ft	14ft *
Enrichment	Max. 5 wt%	←
Gadolinia Content	Max. 10 wt%	8wt%**
Pellet Density	97 % TD	95.5%TD*
Material		
Cladding	ZIRLO™	←

* Westinghouse fuel, ** AREVA fuel

Copyright© 2007 MITSUBISHI HEAVY INDUSTRIES, LTD.

Intermediate Grid Spacer

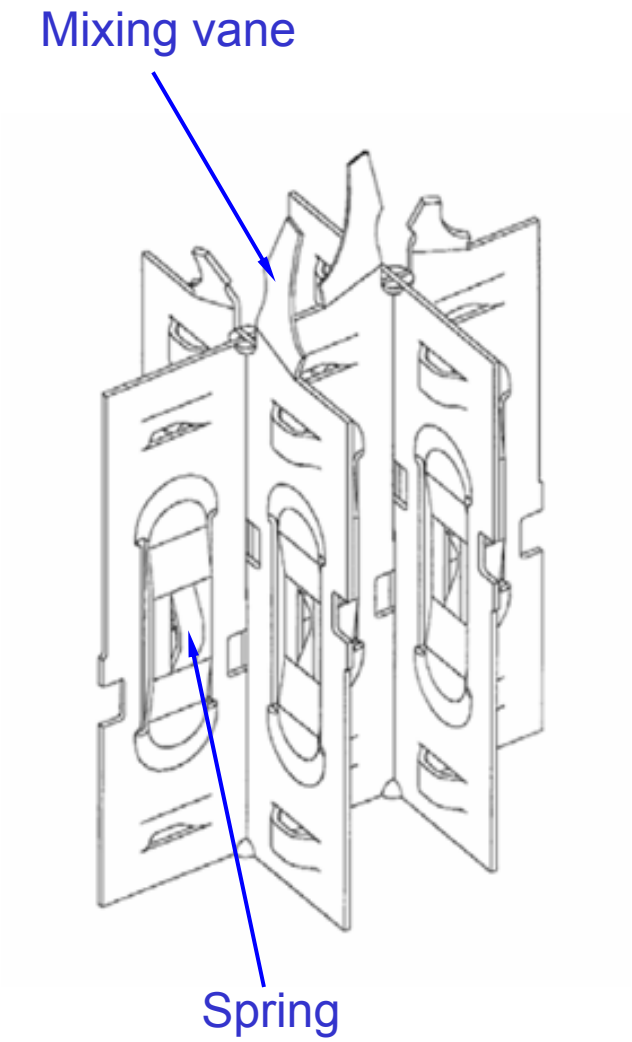

- High DNB performance
- Steady spring force during life

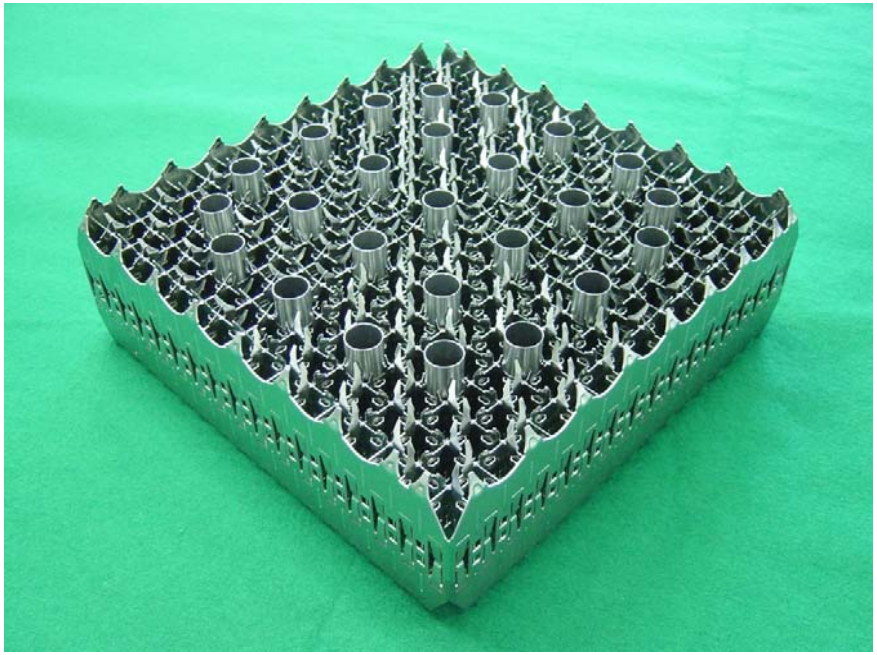

Copyright© 2007 MITSUBISHI HEAVY INDUSTRIES, LTD.

Bottom Nozzle

Anti-debris built-in filter

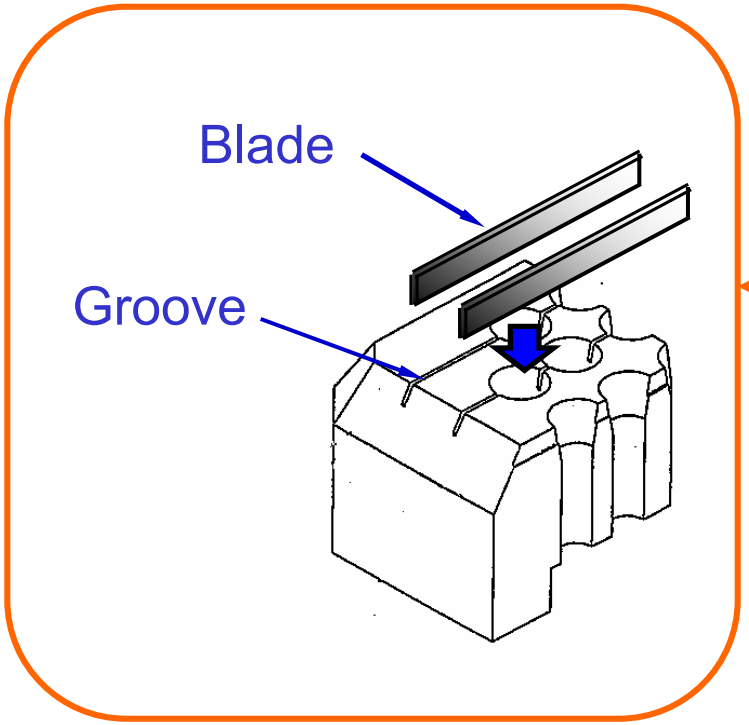

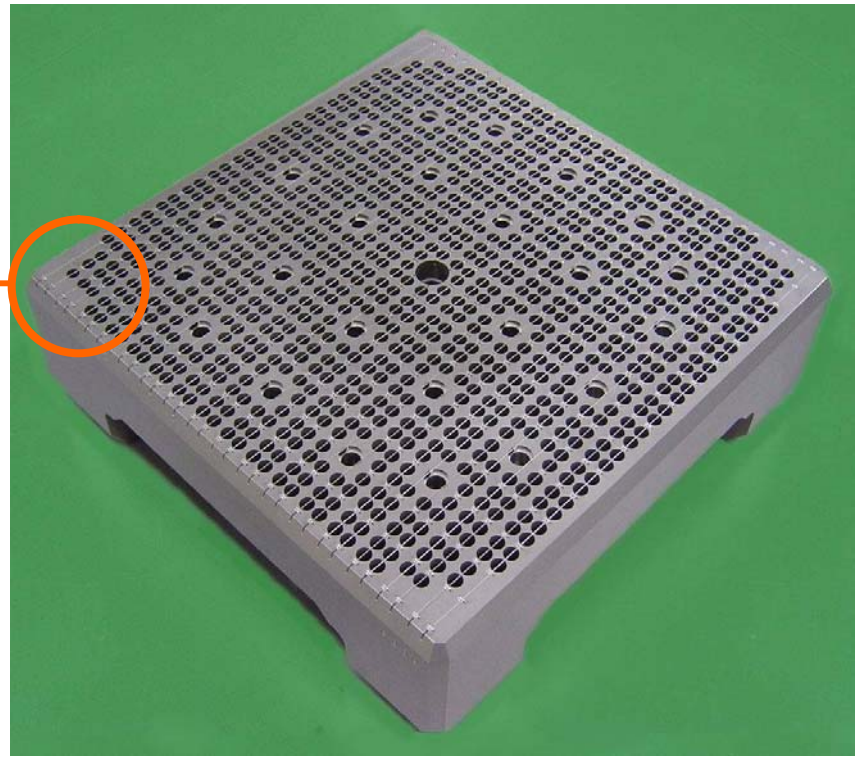

- Improved debris trapping performance
- Low pressure drop

Copyright© 2007 MITSUBISHI HEAVY INDUSTRIES, LTD.

Thermal Power & Density

Large thermal output + Low power density

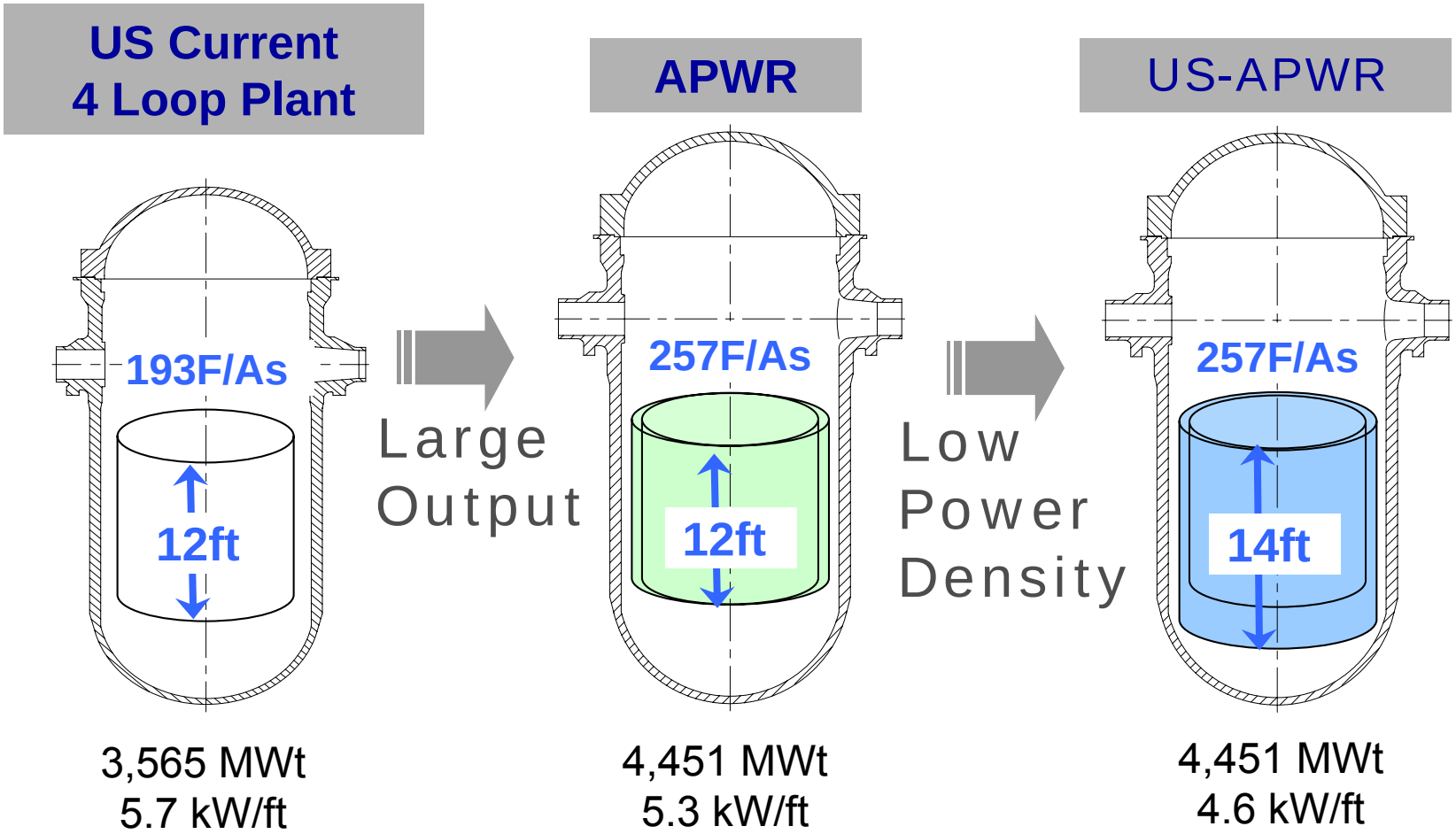

Copyright© 2007 MITSUBISHI HEAVY INDUSTRIES, LTD.

Core & Fuel Configuration

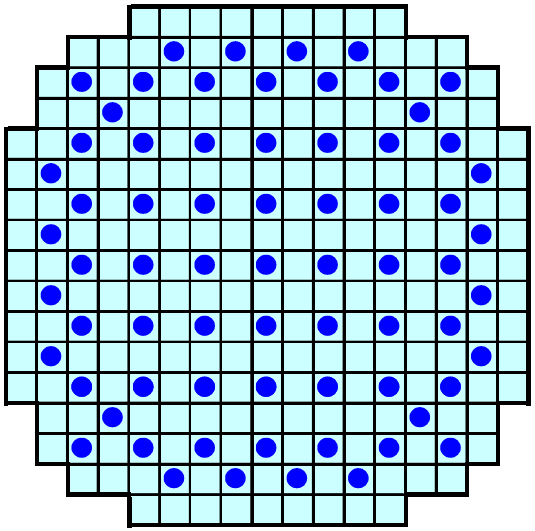

- 17x17 fuel assembly (257)
- Rod cluster control assembly (69)

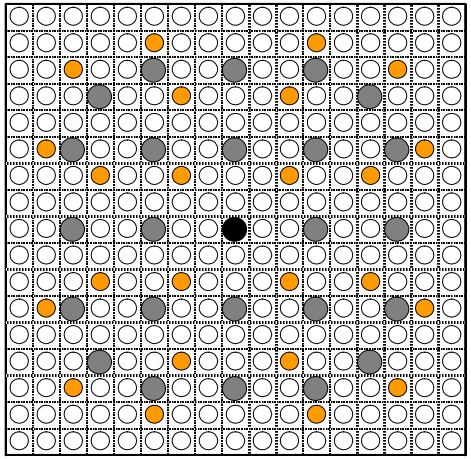

- Fuel rod (264)
- Gd rod (24)
- Guide thimble (24)
- Instrumentation guide tube (1)

Reactivity control

- Ag-In-Cd RCCAs for fast reactivity transients and hot shutdown
- Soluble boron system for cold shutdown and burnup

Burnable absorbers

- Discrete borosilicate glass BP rods
- Gd integral fuel rod

Copyright© 2007 MITSUBISHI HEAVY INDUSTRIES, LTD.

Nuclear Design

➢ Low power density for flexible operation

✓ Longer cycle operation for a given cycle burnup

- 24-month 2-batch equilibrium cycles sustainable with
  - U235 enrichment < 5wt%
  - Maximum rod burnup $\leq$ 62GWd/t

✓ Large thermal margin (F_{dH} ~1.7 F_Q ~2.6)

➢ Negative reactivity feedback

✓ Doppler feedback against rapid reactivity insertion

✓ Moderator temperature coefficient with negative feedback effect during operation

➢ Steel neutron reflector

✓Reduce neutron leakage to enhance neutron economy

✓Reduce reactor vessel irradiation

Copyright© 2007 MITSUBISHI HEAVY INDUSTRIES, LTD.

Thermal / Hydraulics

- **Low power density core**
  - ✓Larger safety margins than conventional plants for DNB and fuel centerline melting
- **High DNB performance grid**
- **Shorter grid spacing**
  - ✓Further DNB margin without internal mixing devices

Copyright© 2007 MITSUBISHI HEAVY INDUSTRIES, LTD.

Reactor Internals

- **Enhanced neutron economy**
  - ✓ Large diameter of core barrel for 257 F/A's
  - ✓ Integration of lower core plate and lower support for 14ft F/A
  - ✓ Neutron reflector

- **Improved reliability and maintainability**
  - ✓ Neutron reflector to reduce bolt number and fluence for reactor vessel
  - ✓ Upper mounted in-core instrumentation system and simplified diffuser plate

Copyright© 2007 MITSUBISHI HEAVY INDUSTRIES, LTD.

Reactor

- Flexible Operation
- Enhanced Economy
- Improved Reliability

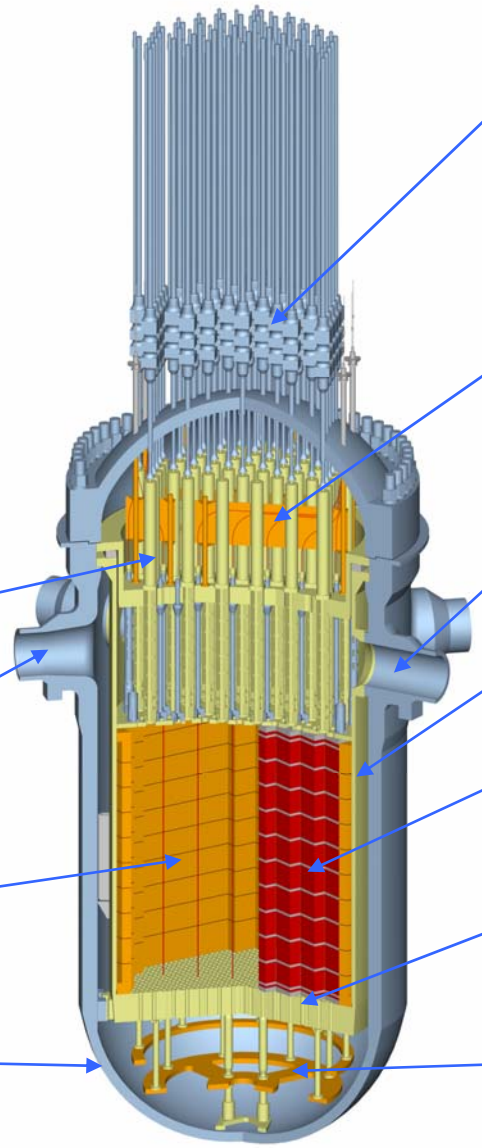

Copyright© 2007 MITSUBISHI HEAVY INDUSTRIES, LTD.

Upper Mounted ICIS

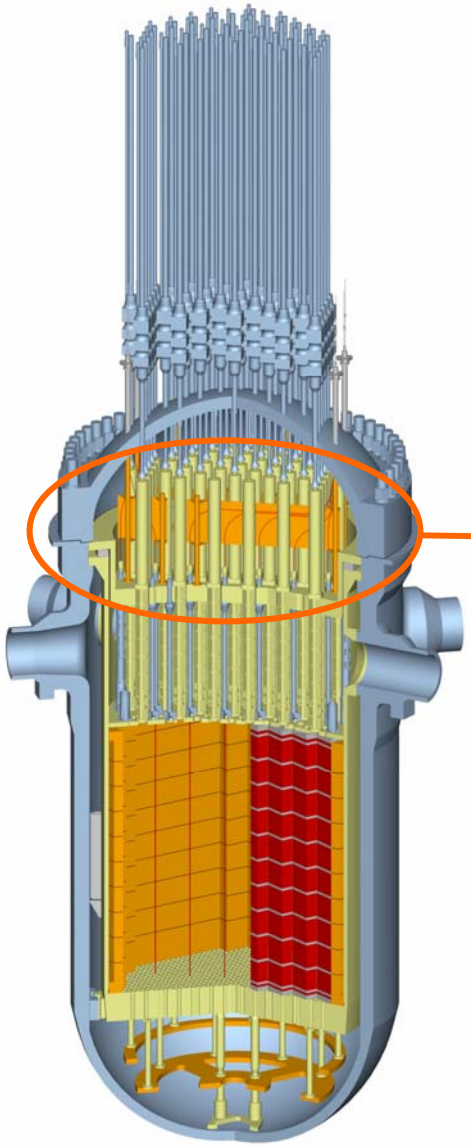

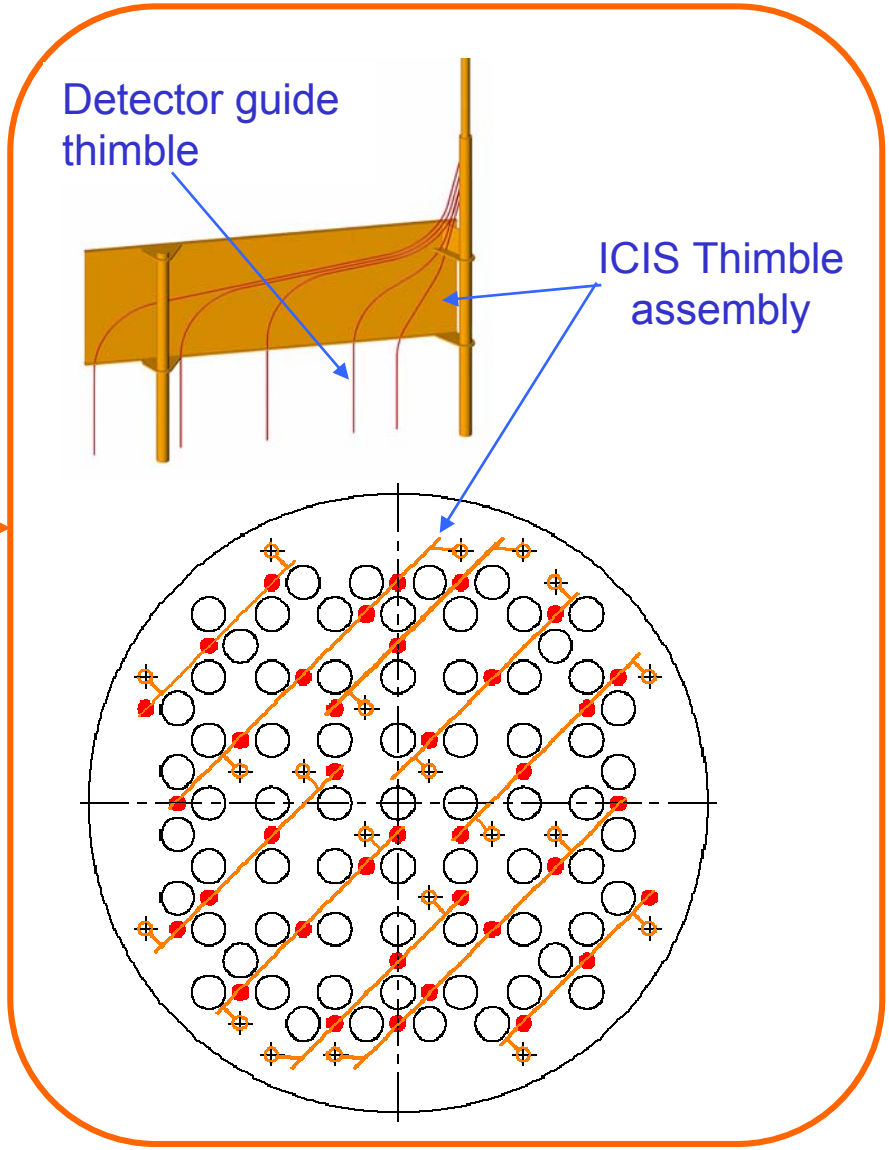

Copyright© 2007 MITSUBISHI HEAVY INDUSTRIES, LTD.

Neutron Reflector

Improved reliability

- Remarkably simplified and reliable structure
  - **Number of bolts reduced significantly and located at only out of core region**
  - **No welds**

Enhanced performance

- Reduced neutron exposure rate
  - **1/3 of current 4 loop design without neutron shield**

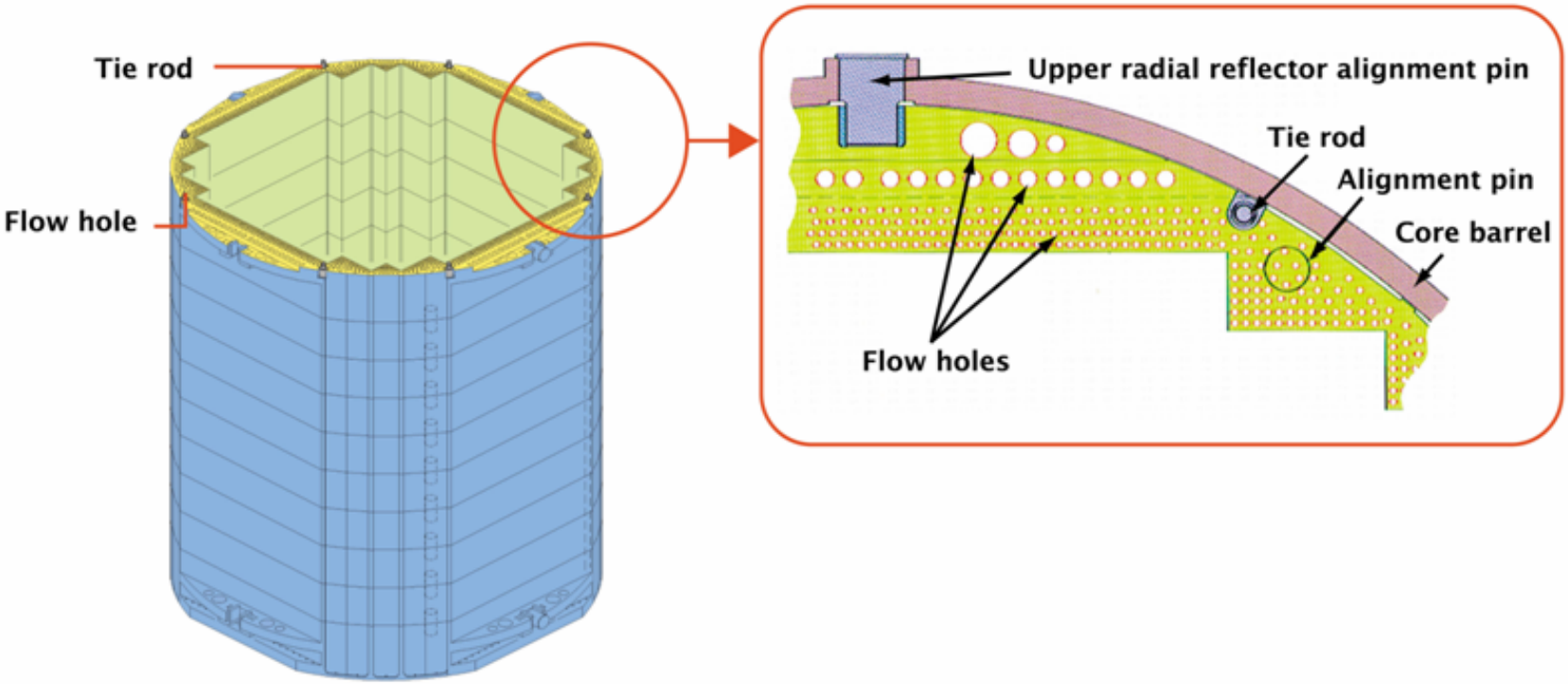

Copyright© 2007 MITSUBISHI HEAVY INDUSTRIES, LTD.